Economic Recovery of Low Value Stack Heat using Organic and Rankine Cycle Technology

By

Moeez Bilal

Zunaira Irfan

Mayedah Kirmani

School of Chemical and Materials Engineering

National University of Sciences and Technology

2018

Economic Recovery of Low Value Stack Heat using Organic and Rankine Cycle Technology

Moeez Bilal	NUST201432286BSCME99114F
Zunaira Irfan	NUST201433740BSCME99114F
Mayedah Kirmani	NUST201434423BSCME99114F

This thesis is submitted as a partial fulfilment of the requirement for the degree of

BE in Chemical Engineering

Supervisor: Dr. Arshad Hussain

Dean of School of Chemical and Materials Engineering Department

School of Chemical and Materials Engineering

National University of Sciences and Technology

May, 2018

Certificate

This is to certify that work in this thesis has been carried out by **Mr. Moeez Bilal, Ms. Zunaira Irfan and Ms. Mayedah Kirmani** and completed under my supervision in School of Chemical and Materials Engineering, National University of Sciences and Technology, H-12, Islamabad, Pakistan.

Supervisor:

_____

Dr. Arshad Hussain

Dean, School of Chemicals and Materials Engineering, NUST

Submitted through:

_____

HOD Chemical Engineering

Dr. Bilal Khan Niazi

DEDICATION

To

Our teachers and parents whose constant hard work and support enabled us to be what we are

To our friends

تُو رہ نوردِ شوق ہے، منزل نہ کر قبول

ACKNOWLEDGMENTS

There are a number of people without whom this project would not have been possible to complete.

We are grateful to our supervisor, **Dr. Arshad Hussain**, who guided and supported us throughout the project. Without his expertise and constant guidance the completion of this project would not have been possible.

We are also very grateful to our industrial supervisor, **Mr. Tehseen Ullah**, Senior Process Engineer at Fauji Fertilizer Company Limited. He helped us to understand the technical aspects of the problem in hand and also guided us through every stage of the project.

We would also like to express our gratitude to **Yalmaz Akhtar,** Junior Executive, Production Urea at Fauji Fertiliser who helped us in designing of the project.

We are also grateful to **Dr. Salman Raza Naqvi** who helped us and guided us with his valuable experience.

We would also like to thank our fellow classmates and friends who supported us throughout the project.

Authors

Moeez Bilal

Zunaira Irfan

Mayedah Kirmani

ABSTRACT

Demand of energy is increasing day by day while the resources used to generate this energy are limited. A major portion of the energy produced in the world is used by industrial sector. Major portion of this energy is lost in the form of waste heat streams that are at low temperature. Conventional waste heat recovery systems are not capable of recovering heat from these low temperature streams.

This project assigned by Fauji Fertilizer Company aims to recover heat from stack gases of Primary Reformer Section at Ammonia Plant. Organic Rankine Cycle and Ammonia Rankine Cycle provide two solutions for recovering heat at low temperature efficiently.

The temperature of the stack gases leaving the Primary reformer are at 260°C. Organic Rankine Cycle uses a low boiling working fluid that boils easily at low temperature making heat recovery system more efficient as compared to ordinary Steam Rankine cycle. Ammonia Rankine Cycle uses a solution of Ammonia and Water as working fluid.

Both ORC and ARC technology are efficient but the operating parameters of these technologies are different. After analysing both cycles it was found that ORC with refrigerant R113 was most efficient. Depending upon refrigerant, 1787 kW energy could be recovered from the cycle. Economic analysis was performed and it was found that ORC based system was more economical.

Table of Contents

1- Introduction **16**

1.1- Background 16

1.2- Scope of this work 17

2- Objective and Literature review **19**

2.1- Need of the project 20

2.2- Project/Study Objective 20

2.3- Collection of data/literature review 20

2.3.1- Process description 20

2.3.2- Process flow diagram 21

3- Conventional Rankine Cycle Technology **22**

3.1- Introduction to Rankine Cycle 23

3.1.1- Constraints on low temperature heat recovery 24

3.1.2- Steam based Rankine Cycle 24

4- Organic Rankine Cycle **26**

4.1- Introduction Organic 27

4.1.1- Thermodynamic properties of fluid 28

4.1.2- Heat transfer properties 28

4.1.3- Environmental and safety concerns 28

4.2- Simulation of ORC 29

4.2.1- Basis of Simulation 29

4.2.2- Simulation results 30

5- Material Balance **32**

5.1- Material Balance 33

5.1.1- Desulfuriser 33

5.1.2- Primary Reformer 36

6- Energy Balance **40**

6.1- Energy Balance 41

6.1.1- Stream Specifications……...41

6.1.2- Flue Gas Specifications…….……...42

6.1.3- Boiler…….…...42

6.1.4- Regenerator……..……...42

6.1.5- Condenser…….....43

6.2- Duties of Heat Exchangers.....43

6.3- Turbine……44

6.4- Pump……...44

7- Designing of Equipment.....**45**

7.1- Boiler and Condenser 46

7.2- Pump.....49

7.3-Result of designing equipment…….50

8- Costing of Equipment.....**53**

8.1- Heat Exchanger……..……...54

8.2- Turbine and Pump…….....56

8.3- Costing Result……56

8.3.1- Fixed Capital Cost and Annual Operating Cost Requirement…….56

9- Ammonia Rankine Cycle…….....**58**

9.1- Introduction…….59

9.2- Principle……...60

9.3- Concentration dependence of Kalina Cycle…….....61

9.4- Feasibility of ARC……61

10- Conclusion……..…….....**62**

10.1- Break Even Analysis…….63

10.2- Conclusion...……...……...63

11- HAZOP Analysis…….…..……...…….....**64**

References……..….…….....**72**

List of abbreviations

ORC	Organic Rankine Cycle
ARC	Ammonia Rankine Cycle
RC	Rankine Cycle
LMTD	Log mean temperature difference
FFC	Fauji Fertilizer Company
bhp	British horse power
rpm	Rotation per minute
SCFM	Standard cubic feet per meter
kW	Kilo watt
kPa	Kilo Pascal
psig	pound per square inch
CFC	Chlorofluorocarbons
HFC	Hydrofluorocarbons
ODP	Ozone depletion potential
GWP	Global warming potential
a_s	Shell side flow area
ID	Inside diameter of heat exchanger
C’	Clearance
P_t	Pitch of heat exchanger
U_c	Overall heat transfer coefficient
h_i	heat transfer coefficient
h_o	outside heat transfer coefficient

NPSH	Net positive Suction Head
P_a	Absolute pressure at the discharge of the pump
P_v	Vapour pressure of the fluid
H_f	Pipe fitting or frictional losses
Z_a	Height of vessel from pump
Pf	Pressure Factor
Mf	Material Factor
C_f	Base cost of Equipment
T_f	Tubing Factor
P_l	Density of liquid phase
P_v	Density of vapour phase

List of tables

Table 2.1: Specification of Flue Gas

Table 4.1: Composition of Flue Gas

Table 4.2: Power Output of Refrigerants

Table 5.1: Natural Gas Specifications

Table 5.2: Recycle Gas Specifications

Table 5.3: Calculations Based of Sulphur

Table 5.4: Desulphurised Natural Gas Specifications

Table 5.5: Steam Mass Flow

Table 5.6: Component Balance

Table 5.7: Flue Gas Specifications

Table 6.1: Stream Specifications

Table 6.2: Flue Gas Specifications

Table 6.3: Specific Enthalpy of R113 at different Temperatures

Table 6.4: Specific Enthalpy of Water at different Temperatures

Table 6.5: Specific Enthalpy of Flue Gas In at different Temperatures

Table 6.6: Specific Enthalpy of Flue Gas Out at different Temperatures

Table 7.1: Design Specifications of Boiler

Table 7.2: Design Specifications of Condenser

Table 7.3: Design Specifications of Pump

Table 8.1: Correlations of Purchase Cost

Table 8.2: Material Factor

Table 8.3: Tube Factor

Table 8.4: Base Cost of heat Exchangers

Table 8.5: Costing Results of ORC

Table 8.6: Total Equipment Cost

Table 8.7: Costing Results

Table 11.1: HAZOP analysis of ORC

List of figures

Figure 3.1: Rankine Cycle

Figure 3.2: P-H Diagram Rankine Cycle

Figure 4.1: Simulation of Organic Rankine Cycle

Figure 4.2: Power Output for Refrigerants

Figure 9.1: T-S Diagram of Rankine Cycle & Ammonia Rankine Cycle

Figure 9.2: Ammonia-Water Composition Diagram

1

INTRODUCTION

1.1 Background

The industrial sector takes over a large portion of the energy that is produced. The consumption of resources like coal and hydrocarbons is increasing day by day, hence the overall demand increases. Although these resourceful fuels are helpful to us in many ways but they generate a lot of dangerous materials like greenhouse gases that are a big risk for humans as well as are a threat to environment sustainability.

There are high chances that we might run out of fuel if we continue to use our finite resources at this rate and will eventually end up damaging our environment. Therefore we must deduce a way in which these resources are efficiently used and not wasted. Industrial sector is the major consumer of most of the energy that is being generated. There are many ways to solve this problem, one of them being Waste Heat Recovery for generation of renewable energy for increasing energy efficiency. Waste heat recovery system is majorly capable of extracting heat from heat source and putting it in the form of useful work. Heat source in this case can be exhaust gases. This technology could play a vital role in increasing energy efficiency in developing countries.

There are multiple existing technologies that are being used to recover energy from waste heat stream. One such example is of Rankine cycle with steam as working fluid. Having said this, one drawback with this system is that it is only capable of recovering heat from heat source that is at high temperature i.e. >300 °C [1].

Unfortunately, most of the industrial waste heat stream are not at such high temperatures and hence are not capable of developing use of Rankine Cycle. According to an estimate almost 20-50% of industrial energy input is lost, and almost 60% of these waste streams are at a temperature below 270 °C [2]. Hence due this temperature, ORC is not capable of recovering heat from these streams.

Water that is used in ordinary Rankine Cycle has very high boiling point i.e. 100 °C. But fortunately there are several technologies that use such working fluids that are capable of boiling at low temperature, thus making it possible to recover heat from waste streams that have low temperature. One such technology is the Organic Rankine Cycle (ORC) which is a modified version of Rankine Cycle that uses low boiling Organic Liquid as working fluid instead of water. Organic Rankine Cycle uses various organic refrigerants that act as a working medium.

Ammonia Rankine Cycle (ARC) or Kalina Cycle is another technology that is being used in waste heat recovery system. Ammonia and water are used as working fluid in this cycle. What differentiates it from other technologies is the fact that the working medium that is being used in it has variable concentration that changes with increase in temperature. Extra amount of heat from waste streams can be recovered in this way.

The choice of the technology to be used is made on the basis of overall economics at any given operating conditions. Hence according to the given conditions it is decided whether ARC technology may be more feasible or ORC technology. Fauji Fertiliser Company (FFC) provided us with this research project along with the conditions for the waste heat recovery of stack gases from exhaust of Primary Reformer.

The examination given in this work focuses on following three tasks:

1. Analysis of both cycles and different refrigerants based on research
2. Designing of Organic Rankine cycle technology based systems
3. Selection of best economical solution on the basis of capital cost and operating cost

1.2 Scope of this work

This thesis includes study of Organic Rankine Cycle and Ammonia Rankine Cycle based power cycles. Ammonia Rankine cycle with ammonia-water solution as a working fluid was studied under various concentrations and given conditions of the two components. Similarly ORC was studied with different working fluid having different boiling points to get the best possible working fluid.

These two processes with different working fluids were studied under various operating conditions. Optimum conditions that gave maximum recovery were calculated and observed. A simulation on ASPEN HYSYS was carried out to facilitate the process. The results obtained from ASPEN HYSYS simulation reinforced the process results. Capital and operating cost of equipment were calculated after choosing the most appropriate power cycle. This thesis also includes the breakeven analysis and calculation of annual profit.

2

OBJECTIVE AND LITERATURE REVIEW

2.1 Need of the Project

Fauji fertilizer Company uses primary reforming as part of the process of Ammonia production which further combines with Carbon dioxide to give urea. Flue gases are produced as a result of the reforming process in the primary reformer. The outlet temperature of these flue gases is 260°C. The temperature of these flue gases is low and energy cannot be recovered from these gases as a result these gases are exhausted directly into atmosphere.

In order to recover heat from the exhaust of these compressors Fauji Fertilizer Company plans to use either Organic Rankine Cycle or Ammonia Rankine Cycle Technology. The energy generated from these flue gases will be used on site as well as transmitted to Fauji Fertilizers Company plant.

2.2 Project/Study Objective

The Objective of this project was to study both Organic and Ammonia Rankine Cycle and select the suitable thermodynamic cycle that recovers the greatest amount of heat as per the given conditions.

2.3 Collection of data/Literature Review

2.3.1 Process Description

The feed gas from Mari petroleum is desulfurized and then sent to the primary reformer. Here the feed gas reacts with steam to form a variety of gases depending on the operating conditions. The common reactions are:

$$CH_4 + H_2O \longrightarrow CO + 3H_2 \quad (1)$$

$$CO + H_2O \longrightarrow CO_2 + H_2 \quad (2)$$

The first reaction is endothermic while the second one is exothermic. Natural gas is used as fuel and the flue gases are released to the atmosphere.

Table 2.1 Specifications of Flue Gas

Specifications of Flue Gas	
Molar Flow Rate (kgmole/h)	1.41×10^4
Mass Flow Rate (kg/h)	3.93×10^4
Temperature (°C)	260
Pressure (kPa)	102

2.3.2 Process Flow Diagram

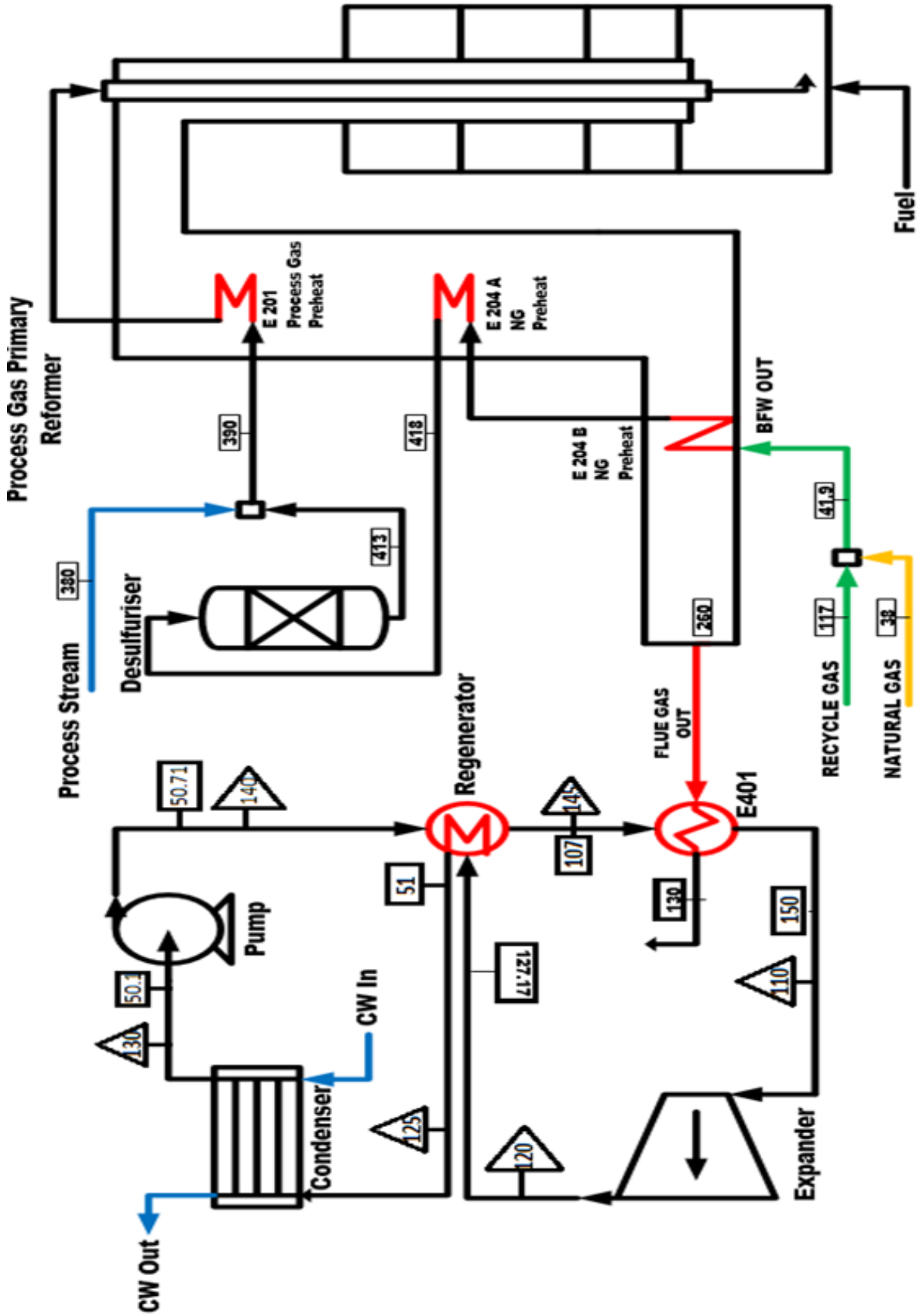

3

CONVENTIONAL RANKINE CYCLE

3.1 Introduction to Rankine Cycle

Rankine Cycle is a thermodynamic cycle that changes and converts heat energy into mechanical energy. Heat is taken from the heat source such as waste heat stream with the use of water as a working medium. Following four steps take place in a conventional Rankine cycle:

- Step 1-2: Compression in pump
- Step 2-3: Vaporization in boiler
- Step 3-4: Expansion in expander
- Step 4-1: Condensation in a condenser

These four processes are illustrated on the Figure 3.1 and P-H Diagram Figure 3.2 below.

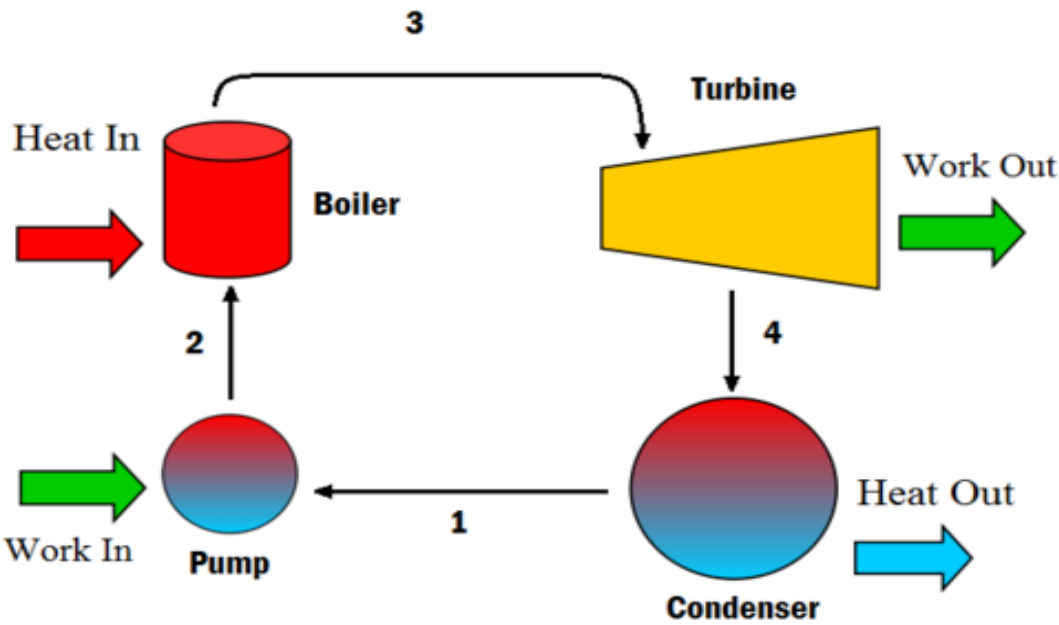

Figure 3.1: Rankine Cycle

3.1.1 Constraints for low temperature recovery

In a conventional Rankine cycle the vapours that are leaving the expander should be of 100% quality in the dry region. If not, the vapours will cause corrosion in the turbine blades [3]. High degree of superheat is necessary if water is used a working medium which is shown by the slope of vapour saturation line in the P-H diagram of Rankine Cycle.

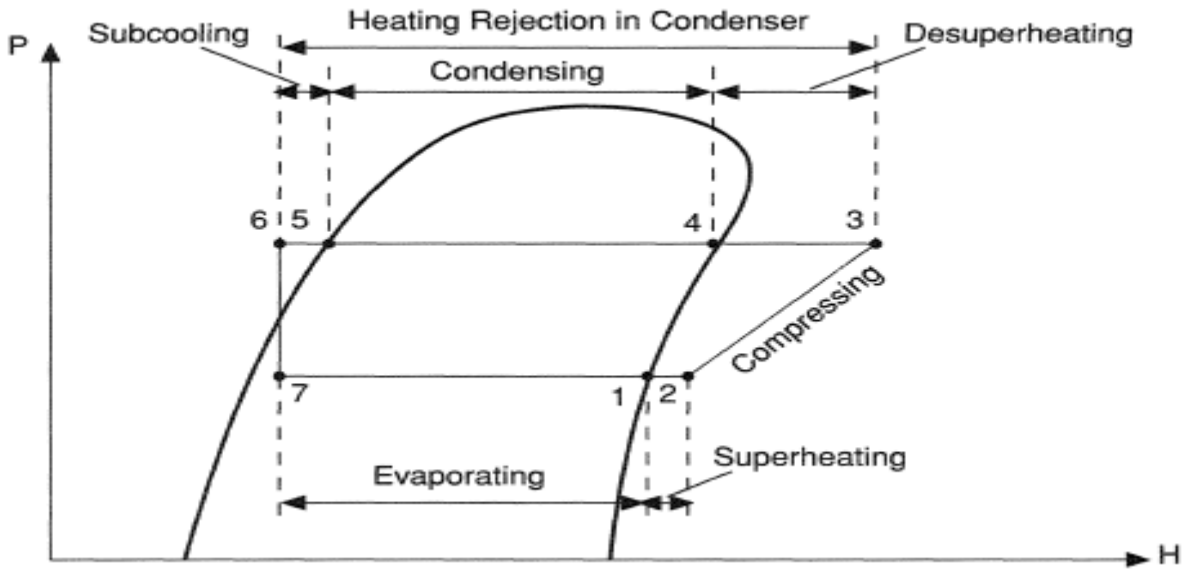

Figure 3.2: P-H Diagram Rankine Cycle

3.1.2 Steam based Rankine cycle

Sometimes Rankine cycle that uses water as working medium is also referred to as steam power cycle. Heat is extracted from heat source such as waste heat stream using Water and converts it into steam. This steam that is produced is very useful and can be used to generate electricity in expander. Vapours are passed through condenser after passing through expander. In this step the vapours are converted to liquid phase. This Liquid water undergoes a pump and goes back to boiler to complete the cycle.

The extra degree of superheat required in this case makes conventional RC unfeasible at low temperature sources. Organic working fluids and Ammonia-water solutions are capable of boiling at low temperature. The slope of vapour saturation line of these fluids is such that they do not require extra degree of superheat to give vapours in dry region after expansion. This proves that no condensate is formed after expansion has taken place. This, condition of no superheating required allows ORC and ARC to recover heat at very low temperature along with the low boiling point condition.

4

ORGANIC RANKINE CYCLE

To employ an efficient power cycle, the type of working fluid and pressure inside the boiler are the major factors to be considered. So to ensure an efficient power cycle, an appropriate fluid has to be chosen with optimum operating conditions.

4.1 Introduction

This cycle's basic concept is that it uses an organic fluid instead of water. Various factors including heat source and sink temperature determine the choice of working fluid. Number of fluids can be used at any given conditions. Other factors that affect the choice of fluid are thermodynamic specifications, environmental hazards, safety and overall economy of the fluid.

Organic fluids that are commonly used have high specific heat and molecular weight. Preferable are the fluids that do not cause any ozone depletion in the atmosphere or have any other environmental hazard. Essentially, environmental sustainability is an important factor to be considered.

To be able to choose the best organic fluid for the provided conditions, results from simulation of power cycle on ASPEN HYSYS were used. Material balance on the system allowed us to determine the composition of flue gas. The composition of the flue gas is in Table 4.1.

Table 4.1: Composition of Flue Gas

Composition of Flue Gas	
Gases	Mole Percentage (%)
Oxygen	1.49
Nitrogen	70.76
Carbon dioxide	9.65
Water	1.81

Prior to making a simulation, the criteria for selection of fluid were as follows:

4.1.1 Thermodynamic Properties of fluid

Thermodynamic properties are an essential factor that affects the efficiency by which a fluid utilizes waste heat. Some important properties are:

1. The condensing pressure should be higher than atmospheric pressure so as to avoid leakage of fluid in the atmosphere.

2. Phase fluid with high vapour density should be used as it allows us to obtain minimum component size during designing. Higher vapour density means that low volumetric flow rate would be required. The capital cost of the equipment depends upon the vapour density of the organic fluid used.

3. Working fluids that have less slope of vapour saturation line are preferred. Saturation line of the organic fluid should be such that it produces 'dry' vapours at the outlet of expander.

4. Fluids that have high variation in enthalpy give high net work output fluid with high heat capacity (C_p) should be used. Higher the heat capacity less mass flow rate of fluid is required to recover the same amount of heat.

5. Working fluid should be thermally stable under given conditions.

4.1.2 Heat Transfer Properties

Sizing of equipment like condenser and boiler depend greatly on the heat transfer properties. When a fluid with the high heat capacity (C_p) is used, the ability to absorb heat from a thermal source is greater and efficient. So a working fluid that has high heat capacity and high thermal conductivity is appropriate. Along with that, the working fluid viscosity should be low so that it can prevent frictional losses.

4.1.3 Environmental and Safety concerns

Refrigerants such as Chlorofluorocarbons (CFCs), Hydrofluorocarbons (HFCs) and halons have good thermodynamic properties but they have huge environmental and safety concerns associated with them, such as high Global Warming Potential

(GWP) and Ozone Depletion Potential (ODP). Due to this reason, such refrigerants are not used. So a compromise has to be reached where a refrigerant is chosen based on appropriate thermodynamic properties and minimal environmental hazards.

Based upon selection considerations [4-10], three working fluids R141b, R113 and R11 were selected. Simulation model for all three working fluids was compared by varying boiler and condenser operating temperature and pressure. Finally, the best working fluid was selected based on the net power generated.

4.2 Simulation of ORC

4.2.1 Basis of Simulation

- Flue gases enter Boiler at temperature of 260°C
- Flue gases leaving Boiler are at temperature of 130°C
- Molar flow was given by Fauji Fertilizer Company i.e. 1.413×10^4 kgmol/hr
- Turbine adiabatic efficiency was assumed 75%
- Pump with 75% adiabatic efficiency is used
- Cooling Water enters the Condenser at 33°C (Figure 4.1)

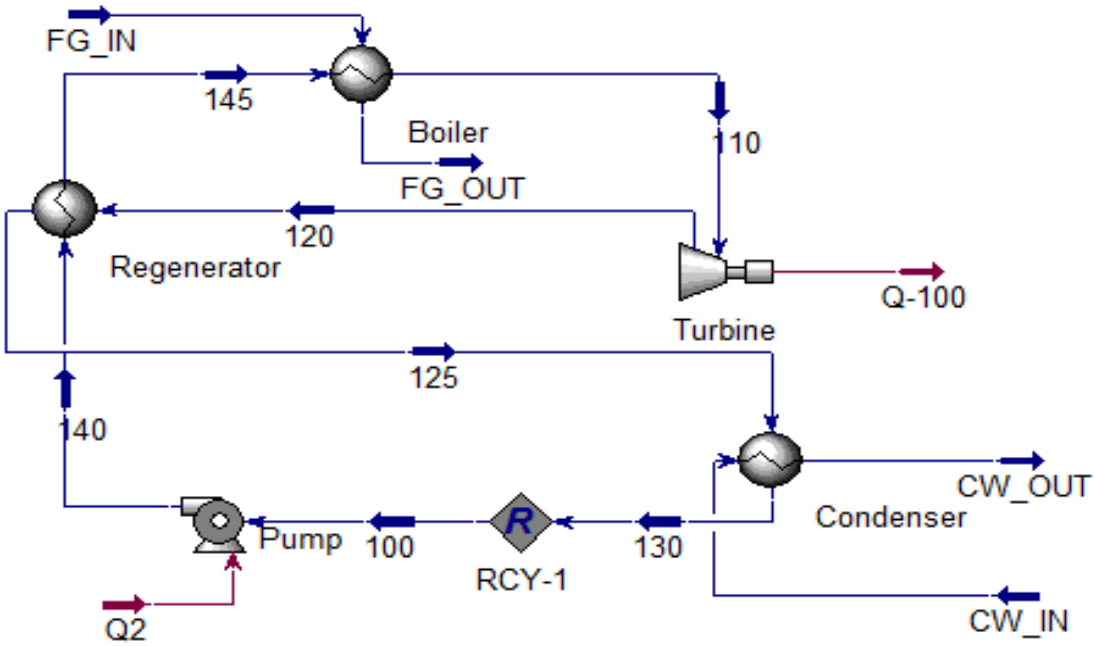

Figure 4.1: Simulation of Organic Rankine Cycle

Temperature and pressure are two factors that determine the net power output of the turbine or expander. Along with that, the choice of working fluid used also has some effect on the net power generated. A general simulation model for ORC was operated for the three refrigerants and the power output from each was analysed. The purpose of collecting this data was to be able to choose the appropriate working fluid.

4.2.2 Simulation Results

Three groups of working fluid were selected (R113, R20 and R114b2). These fluids were available in the property package of ASPEN HYSYS and were used in the simulation model to get theoretical results for power output under different pressure conditions. The purpose of doing this was to find out the general trend of operating pressure and the type of fluid on the net power output.

The isentropic efficiency of the turbine was set at 0.75. Following figure shows the plot of net power output and evaporator pressure for the three fluids.

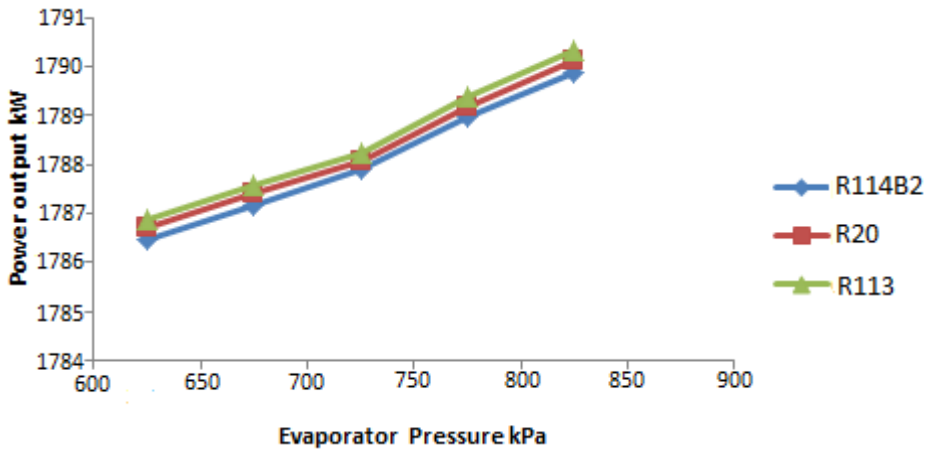

Figure 4.2: Power Output for Refrigerant

The heat recovery efficiency of the power cycle using organic working fluid increases by increasing pressure. This elevated pressure adds extra superheat to the fluid. Increase in net power output is the result of this superheat. Higher operating pressure in evaporator affects the overall economy of the process. Higher the pressure more the operating and capital cost would be. While designing of equipment we need to optimize the capital cost, operating cost and the net power output.

From the set of data obtained from ASPEN HYSYS, working fluid that gave maximum power output was determined. Table 4.2 shows the power output for each refrigerant for ORC.

Table 4.2: Power Output of Refrigerants

Evaporator Pressure (kPa)	Refrigerant	Power Output (kW)
639.5	R113	1786.8
	R20	1786.5
	R114b2	1786.3
738.5	R113	1788.2
	R20	1788.0
	R114b2	1787.7
836.5	R113	1790.4
	R20	1790.1
	R114b2	1789.9

For selection of a suitable system, the costing needs to be done. It allows us to choose a system which is the most feasible economically. However, costing requires the total heat exchanger area. For that designing of the equipment is necessary.

5

MATERIAL BALANCE

5.1 Material Balance

5.1.1 Desulfuriser

A material balance was performed on the Desulfurizer of Plant III.

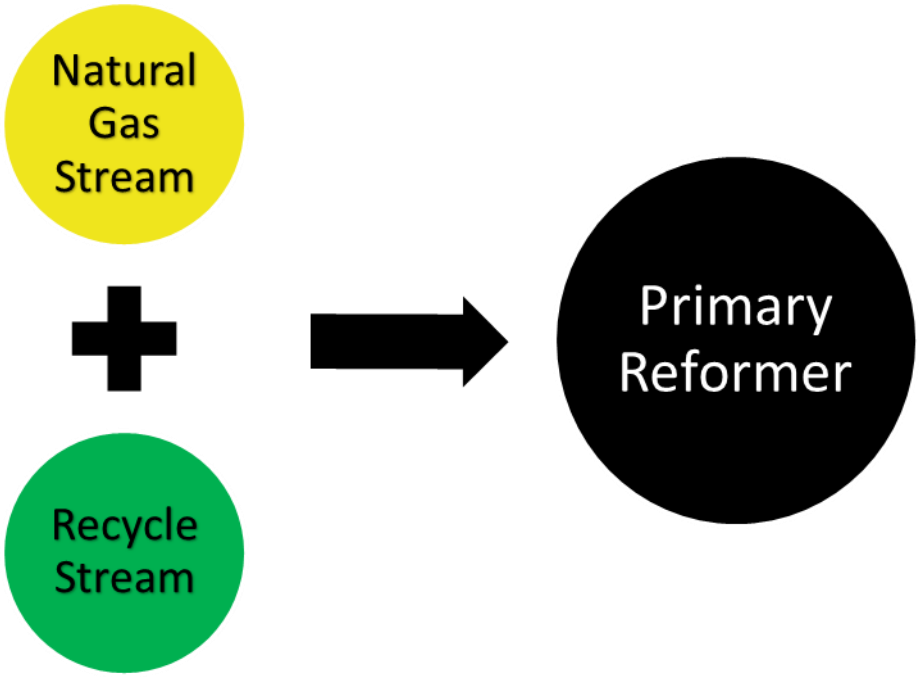

Inlet Stream 1: Natural Gas

Natural Gas Flow rate was found to be 4.19×10^4 Nmc/h (1.870×10^3 kgmol/hr)

Table 5.1: Natural Gas Specifications

Component	mol%	Kgmol	Molecular Weight	Mass (kg)
Hydrogen	0.001	1.8708	02	3.74
Nitrogen	0.195	364.805	28	1.02×10^4
Methane	0.712	1.33×10^3	16	2.13×10^4
Carbon Dioxide	0.090	1.68×10^2	44	7.41×10^3
Ethane	0.002	3.74159	30	1.12×10^2
Total		1.87×10^3		3.92×10^4

Inlet Stream 2: Recycle Gas

Recycle Gas Flow Rate flow rate was found to be 7.49×10^2 Nmc/hr (33.4 kgmol/h)

Table 5.2: Recycle Gas Specifications

Component	mol%	Kgmol	Molecular Weight	kg
Hydrogen	0.742	24.8	02	49.6
Nitrogen	0.248	8.29	28	232
Methane	0.008	0.267	16	4.28
Carbon Dioxide	0	0	44	0
Ethane	0	0	30	0
Argon	0.002	0.0735	40	2.94
Total		33.4		2.88×10^2

The chemical reactions taking place in the Desulfurizer are:

$H_2 + S \longrightarrow H_2S$
$H_2 + COS \longrightarrow H_2S + CO$
$H_2 + RSH \longrightarrow H_2S + RH$
$ZnO + H_2S \longrightarrow ZnS + H_2O$

Side Reaction

$CO_2 + H_2 \longrightarrow CO + H_2O$

The content of Sulfur in inlet stream was found out to be 0.92 ppm (1.21×10^{-3} kmol/h) and 5 ppb (6.55×10^{-6} kmol/h). Basis taken was CO_2 conversion 1% and calculations were carried out based on the chemical reactions stoichiometry.

Table 5.3: Calculations based on Sulphur

Sulphur absorbed	0.001	kmol/h
H_2 consumed in Sulphur removal	0.001	kmol/h
H_2O formed in Sulphur removal	0.001	kmol/h
Oxygen from ZnO	0.001	kmol/h
CO^2 consumed in side reaction=	1.684	kmol/h
H_2 consumed in side reaction=	1.684	kmol/h
CO formed in side reaction=	1.684	kmol/h
H_2O formed in side reaction=	1.684	kmol/h

Hence the total mass in inlet stream was

Outlet Stream

Desulfurised Natural Gas Flow rate was found out to be 4.26×10^4 Nmc/h

Table 5.4: Desulphurised Natural Gas Specifications

Component	mol%	Kgmol	Molecular Weight	Mass(kg)
Hydrogen	1.31%	24.9	02	49.9
Nitrogen	19.59%	3.73×10^2	28	1.04×10^4
Methane	69.96%	1.33×10^3	16	2.13×10^4
Carbon Dioxide	8.75%	1.66×10^2	44	7.33×10^3
Carbon Monoxide	0.09%	1.68	28	47.1
Ethane	0.20%	3.74	30	1.12×10^2
Argon	0.00%	7.35×10^{-2}	40	2.94
Water	0.09%	1.68	18	30.3
Total	100%	1.90×10^3		3.94×10^4

Material Balance Check

Mass In=Mass Out

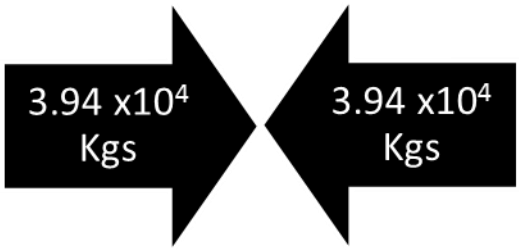

5.1.2 Primary Reformer

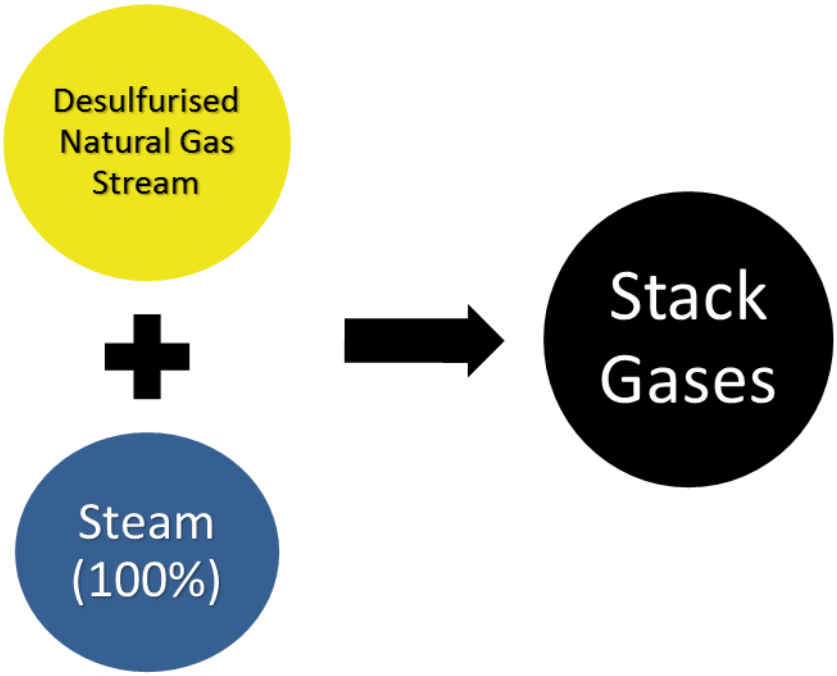

Inlet Stream 1: Desulfurised Natural Gas

The Desulfurised Natural Gas Flow rate was found out to be 4.26×10^4 Nmc/h

Table 5.4: Desulphurised Natural Gas specifications

Component	mol%	Kgmol	Molecular Weight	Mass(kg)
Hydrogen	1.31%	24.9	02	49.9
Nitrogen	19.59%	3.73×10^2	28	1.04×10^4
Methane	69.96%	1.33×10^3	16	2.13×10^4
Carbon Dioxide	8.75%	1.66×10^2	44	7.33×10^3
Carbon Monoxide	0.09%	1.68	28	47.1
Ethane	0.20%	3.74	30	1.12×10^2
Argon	0.00%	7.35×10^{-2}	40	2.94
Water	0.09%	1.68	18	30.3
Total	100%	1.90×10^3		3.94×10^4

Inlet Stream 2: Steam (100%)

Chemical Reactions involved in the Primary Reformer are

Steam-Methane Reforming Reaction:

$$CH_4 + H_2O \longrightarrow CO + 3H_2$$

Conversion is 72%

$C_2H_6 + 2H_2O \longrightarrow 2CO + 5H_2$

Conversion is 100%

Water-Gas Shift Reaction

$CO + H_2O \longrightarrow CO_2 + H_2$

Conversion is 49.8%

The Steam to Carbon ratio is 3.75. The carbon content in Desulfurised Natural Gas is 1.51×10^3 kgmol/h. Hence Steam flow rate calculation was carried out

Table 5.5: Steam Mass Flow

Component	mol%	Kgmol/hr	MW	Kg
Water	100%	5.65×10^3	18	1.02×10^5

Hence the total mass in inlet stream is

Outlet Stream

The material Balance was applied on individual components and calculations were carried out

Table 5.6: Component Balance

Methane Balance

CH4 reacted to produce CO	9.59×10^2 kgmol/h
CH4 exit = CH4 entered - CH4 reacted	3.73×10^2 kgmol/h

Carbon monoxide Balance

Ethane reacted to produce CO	3.74 kgmol/h
CO produced	9.66×10^2 kgmol/h
CO produced + CO entered	9.68×10^2 kgmol/h
CO reacted	4.82×10^2 kgmol/h
CO at exit	4.86×10^2 kgmol/h

Carbon dioxide Balance

CO2 produced	4.82×10^2 kgmol/h
CO2 exit = CO2 entered + CO2 reacted	6.48×10^2 kgmol/h

Water Balance

Water reacted in steam reforming	9.66 x10^2 kgmol/h
Water in shift gas reaction	4.82 x10^2 kgmol/h
Total water reacted	1.45 x10^3 kgmol/h
Water exit = water entered - water reacted	4.21 x10^3 kgmol/h

Hydrogen Balance

Hydrogen produced in steam reforming	2.89x10^3 kgmol/h
Hydrogen produced in shift reaction	4.82x10^2 kgmol/h
Total Hydrogen produced	3.38x10^3 kgmol/h
Hydrogen exit = hydrogen in + hydrogen produced	3.40 x10^3 kgmol/h

Nitrogen Balance

Nitrogen exit = Nitrogen Entered	3.73x10^2 kgmol/h

Argon Balance

Argon exit = Argon entered	7.4 x10^{-2} kgmol/h

Table 5.7: Flue Gas Specifications

Component	kgmol	mol %	Molecular Weight	kg	Dry Basis	Nmc/h
Hydrogen	3.40x10^3	35.8	02	6.81 x10^3	64.4	7.63 x10^4
Nitrogen	3.73 x10^2	3.93	28	1.04 x10^4	7.06	8.36 x10^3
Carbon Monoxide	4.86 x10^2	5.12	28	1.36 x10^4	9.20	1.09 x10^4
Carbon Dioxide	6.48 x10^2	6.84	44	2.85 x10^3	12.3	1.45 x10^4
Argon	7.00 x10^{-2}	0.00	40	2.94	0.00	1.65
Methane	3.73 x10^2	3.93	16	5.97 x10^3	7.06	8.36 x10^3
Water	4.21 x10^3	44.3	18	7.57 x10^4	0.00	
Total	9.49 x10^3	100		1.41 x10^5	100	

Material Balance Check

Mass In= Mass Out

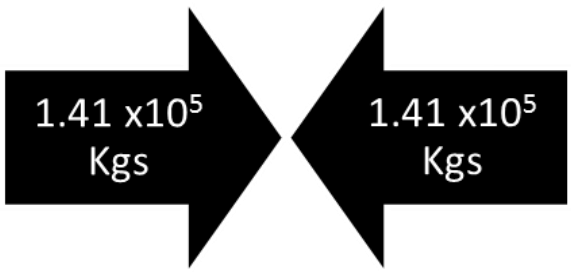

6

ENERGY BALANCE

6.1 Energy Balance

6.1.1 Stream Specifications

An energy balance was performed on the components of Organic Rankine Cycle according to the data provided by Fauji Fertiliser Company

Table 6.1: Stream Specification

Streams	FG IN	FG OUT	145	110	120
Molar Flowrate (kgmole/h)	$1.40x10^4$	$1.40x10^4$	$1.97x10^3$	$1.97x10^3$	$1.97x10^3$
Molecular Weight			$1.87x10^2$	$1.87x10^2$	$1.87x10^2$
Mass Flowrate (kg/h)	$3.92x10^4$	$3.92\ x10^4$	$3.69x10^5$	$3.69x10^5$	$3.69x10^5$
Specific Heat Capacity (kJ/kgmole-K)	32.7	31.7	$1.93x10^2$	$1.44x10^2$	$1.41x10^2$
T (K)	$5.33x10^2$	$4.03x10^2$	$3.80x10^2$	$4.23x10^2$	$4.00x10^2$
Latent Heat of Vaporization (kJ/h)	$4.12x10^8$	$4.13x10^8$	$4.61x10^7$	$4.65x10^7$	$5.16x10^7$

6.1.2 Flue Gas Specification

Table 6.2: Flue Gas Specifications

Streams	125	130	100	140	Cooling Water In	Cooling Water Out
Molar Flowrate (kgmole/h)	$1.97x10^3$	$1.97x10^3$	$1.97x10^3$	$1.97x10^3$	$7.81x10^4$	$7.81x10^4$
Molecular Weight	$1.87x10^2$	$1.87x10^2$	$1.87\ x10^2$	$1.87x10^2$	18.0	18.02
Mass Flowrate (kg/h)	$3.69x10^5$	$3.69x10^5$	$3.69x10^5$	$3.69x10^5$	$1.40x10^6$	$1.40x10^6$
Specific Heat Capacity (kJ/kgmole-K)	$1.31x10^2$	$1.79x10^2$	$1.79x10^2$	$1.44x10^2$	75.3	75.3
T (K)	$3.24x10^2$	$3.23x10^2$	$3.23x10^2$	$4.23x10^2$	$3.06x10^2$	$3.15x10^2$
Latent Heat of Vaporization (kJ/h)	$5.27x10^7$	$5.28x10^7$	$5.28x10^7$	$4.56x10^7$	$2.99x10^9$	$3.01x10^9$

The Flue Gas composition was provided by Fauji Fertiliser Company and the Specific Enthalpies were calculated by the Virial Coefficients; a, b and c from the following formula

$$\mathbf{Cp= a + bT + cT^2}$$

T=Temperature in K

Table 6.3: Specific Enthalpy of R113 at different Temperatures (kJ/kgmole-K)

Component	a	b	c	323.17K	323.7K	324K	380K	400.2K	423K
R113	0	0.326	$7.67x10^{-4}$	179	131	131	193	141	144

Table 6.4: Specific Enthalpy of Water at different Temperatures (kJ/kgmole-K)

Component	a	b	c	306K	315K	324K	380K
$H_2O(g)$	-5.73	1.91	$-3.96x10^{-4}$	75.3	75.3	131	194

Table 6.5: Specific Enthalpy of Flue Gases In at different Temperatures (kJ/kgmole-K)

Flue Gas In	a	b	c	533	Molar Compositions	Average Cp
Oxygen	13.4	0.813	$1.66x10^{-4}$	31.5	0.0149	0.469
Nitrogen	2.89	0.983	$9.71x10^{-5}$	30.4	0.707	21.5
Carbon Dioxide	$1.25x10^{-9}$	0.618	$4.84x10^{-4}$	45.0	0.0965	4.34
Water	-5.73	1.91	$-3.96x10^{-4}$	35.8	0.181	6.48
Total					1	**32.8**

Table 6.6: Specific Enthalpy of Flue Gas Out at different Temperatures (kJ/kgmole-K)

Flue Gas Out	a	b	c	403	Molar Compositions	Average Cp
Oxygen	13.5	0.813	$1.66x10^{-4}$	30.2	0.0149	0.450
Nitrogen	2.89	0.983	$9.71x10^{-5}$	29.7	0.7076	21.0
Carbon Dioxide	$1.25x10^{-9}$	0.618	$4.84x10^{-4}$	41.5	0.0965	4.00
Water	-5.73	1.91	$-3.96x10^{-4}$	34.5	0.181	6.24
Total					1	31.7

6.1.3 Boiler

An energy balance was carried out on the Boiler

Equation used for the calculations

$$Q = m\, C_p\, \Delta t$$

Boiler				
	IN		**OUT**	
E-101	**FG IN**	**145**	**FG OUT**	**110**
T in (K)	533	380	403	423
T ref (K)	298	298	298	298
Δ T (K)	235	82	105	125
Latent Heat of Vaporization (kJ/h)				$4.61x10^{7}$
Heat Flow (kJ/h)	$1.09x10^{8}$	$3.13x10^{7}$	$4.70x10^{7}$	$3.56x10^{7}$
Total (kJ/h)	$1.40x10^{8}$		$1.29x10^{8}$	
	IN = OUT			

6.1.4 Regenerator

An energy Balance was carried out on the Regenerator

Regenerator				
	IN		OUT	
E-100	**140**	**120**	**145**	**125**
T in (K)	323	400	380	324
T ref (K)	298	298	298	298
Δ T (K)	25.7	102.2	82	26
Heat Flow (kJ/h)	$9.09x10^6$	$2.86x10^7$	$3.13x10^7$	$6.73x10^6$
Total (kJ/h)	$3.76x10^7$		$3.81x10^7$	
	IN = OUT			

6.1.5 Condenser

An Energy Balance was carried out on the Condenser

Condenser				
	IN		OUT	
E-102	**125**	**CW IN**	**130**	**CW OUT**
T in (K)	324	306	323	315
T out (K)	298	298	298	298
Δ T (K)	26.0	08	25.17	17
Latent Heat of Vaporization (kJ/h)	$5.27x10^7$			
Heat Flow (kJ/h)	$6.73x10^7$	$4.71x10^7$	$8.89x10^6$	$1.00x10^8$
Total (kJ/h)	$1.07x10^8$		$1.09x10^8$	
	IN = OUT			

6.2 Duties of Heat Exchangers

Duties of Exchangers			
	E-101	**E-100**	**E-102**
T in (K)	533	400.2	324
T out (K)	403	324	323.17
Δ T (K)	130	76.2	0.83
Latent Heat (kJ/h)	0	0	$5.27x10^7$
Duty (kJ/h)	$6.02x10^7$	$2.13x10^7$	$5.30x10^7$

6.3 Turbine

Work done by the turbine was calculated by the following formula

$$\Delta U = Q - W$$

ΔU= Change in Internal Energy
Q= Heat added to the system
W= Work done by the system

Expander		
	IN	**OUT**
K-100	**110**	**120**
T in (K)	423	400
T ref (K)	298	298
Δ T (K)	125	102.2
Heat Flow (kJ/h)	3.56×10^{7}	2.86×10^{7}
Work (kJ/h)	-7.06×10^{6}	

The power generated was calculated and found out to be **1787 kW**.

6.4 Pump

Work done on the pump was calculated using the same formula as mentioned above

Pump		
	IN	**OUT**
P-100	**100**	**140**
T in (K)	323.17	323.71
T out (K)	298	298
Δ T (K)	25.17	25.71
Heat Flow (kJ/h)	8.89×10^{6}	9.09×10^{6}
Work (kJ/h)	1.96×10^{5}	

7

DESIGNING OF EQUIPMENT

An Organic Rankine Cycle comprises of five major equipment which are; boiler, turbine, condenser, regenerator and pump.

7.1 Boiler and Condenser

Purpose of boiler is to extract the heat from flue gas. Refrigerant R-113 was used as a heat transfer medium. This heating method ensures that the refrigerant is not decomposed in the cycle. Counter-current flow pattern was used for the designing of heat exchangers.

The purpose of a condenser is to extract heat from the refrigerant and cool the refrigerant which is then passed on to the pump.

Kern method was used for the designing of heat exchangers.

First Log mean temperature difference (LMTD) was calculated using formula:

$$LMTD = \frac{(T2 - t2) - (T2 - t1)}{\ln[\frac{T1 - t2}{T2 - t1}]}$$

T_1= Temperature of hot fluid entering Heat-exchanger

T_2= Temperature of hot fluid leaving Heat-exchanger

t_1= Temperature of cold fluid entering Heat-exchanger

t_2= Temperature of cold fluid leaving Heat-exchanger

Fluid properties used in calculations i.e. viscosity, thermal conductivity and density were calculated at LMTD.

Heat balance over the two fluids was made using the equation:

$$Q = m \times Cp \times (\Delta T)$$

m = mass flow rate of fluid

C_p = heat capacity of fluid

ΔT= Temperature difference at the ends of heat-exchanger

The area was calculated using the following equation:

$$A = \frac{Q}{U(\Delta T)}$$

U= Overall heat transfer coefficient

Overall Heat Transfer Coefficient was assumed and then further calculations were made to justify the assumed Overall Heat Transfer Coefficient.

For the tube side, inner and outer diameters and length of tube was chosen from literature. The area of a single tube was calculated by the following equation:

$$Area\ of\ One\ Tube = \Pi r L$$

r= inner radius of tube

L= length of tube

Number of tubes, N_t, was calculated using:

$$Nt = \frac{Area\ of\ Exchanger}{Area\ of\ One\ Tube}$$

Next, one of triangular or square pitch was chosen based on the fluid fouling properties. The value was calculated using the equation:

$$Pitch = 1.25 \times do$$

do= outside diameter of tube

Tube Bundle Diameter, D_b, was calculated by:

$$Db = do\left(\frac{Nt}{K1}\right)^{\frac{1}{n1}}$$

K1 and n1 are constants taken from literature which are specific to the type of tube pitch that is being used.

The next step in the designing process was to calculate the tube and shell side coefficient. For this various calculations were required. Tubes per pass and total flow area were determined, which lead us to the mass velocity. Thermal conductivity, density and viscosity were obtained from literature. Prandtl number and Reynolds number calculations were done using equations:

$$Pr = \frac{Cp \times \mu}{k} \qquad Re = \frac{\rho \times di \times ut}{\mu}$$

Cp= specific heat capacity
k= thermal conductivity
ρ= density of fluid
u_t= linear velocity

Tube side coefficient was determined by:

$$hi = \frac{Jh \times Re \times (Pr)^{0.33} \times k}{di}$$

Jh= Tube side heat transfer factor

For the shell side the cross flow area was calculated by:

$$As = \frac{(pt - do) \times Ds \times Lb}{pt}$$

Pt= Tube Pitch

Ds= Shell Diameter

Lb= Baffle Spacing

Similarly equivalent diameter was determined using:

$$De = \frac{1.10}{do}(pt^2 - 0.917do^2)$$

Next, using Reynolds number, Prandtl number and other fluid physical properties, Shell Side heat transfer coefficient was calculated.

$$hs = \frac{k \times Js \times Re \times Pr^{0.33}}{De}$$

Js= Shell side heat transfer factor

Lastly, Overall Heat Transfer Coefficient was determined by:

$$\frac{1}{Uo} = \frac{1}{ho} + \frac{1}{hod} + \frac{do \times ln\left(\frac{do}{di}\right)}{kw} + \frac{do}{di} \times \frac{1}{hid} + \frac{do}{di} \times \frac{1}{hi}$$

Uo= Overall Heat Transfer Coefficient

ho=shell side heat transfer coefficient

hi= tube side heat transfer coefficient

hod= shell side fouling factor

hid= tube side fouling factor

kw= thermal conductivity of material

This Uo was found to be within a 20% range of the assumed U, proving the assumption to be acceptable.

7.2 Pump

Centrifugal pump with 75% efficiency was used in the designing of ORC system. Net Positive Suction Head (NPSH) and the power of the pump are two important designing parameters. In order to calculate these two parameters the pipe fitting losses were calculated.

The discharge pressure and the flow rate of the refrigerant were known. Following correlation was used in order to calculate NPSH of the pump:

$$NPSH = \frac{Pa - Pv}{Density\ of\ Fluid} - hf - Za$$

P_a= Absolute pressure at the discharge of the pump

P_v= Vapour pressure of the fluid

h_f= Pipe fitting or frictional losses

Z_a= Height of the vessel from the pump

In order to calculate the power requirement of pump, work is calculated.

$$W = \frac{g}{gc} \times (z1 - z2) + \frac{(P1 - P2)}{Density\ of\ Fluid} - (Es - Ed)$$

z_1-z_2 = Difference between height at point 1 and point 2

P_1-P_2= Pressure difference between suction and discharge

E_s-E_d= Difference between kinetic heads at suction and Discharge

Once total work is calculated, total power requirement can also be calculated using the following correlation:

$$Power = \frac{Work \times Mass\ Flow\ Rate}{Efficiency\ of\ Pump}$$

7.3 Results of Designing of Equipment

Heat exchangers were used in the ORC system i.e. boiler and condenser. Designing was done for these heat exchangers. Heat transfer area was calculated for the major equipment. The capital cost of the equipment depends upon the heat transfer area and the operating conditions such as pressure and temperature.

Following results were obtained from designing of equipment at optimum conditions.

Table 7.1: Design Specifications of Boiler

Boiler	
Flue Gas Temperature	
T in (ºC)	260
T out (ºC)	130
R-113 Temperature	
t in (ºC)	107
t out (ºC)	150
Ft Factor	1
LMTD (ºC)	55.5
U (W/m^{2o}C)	900
Area (m^2)	91.1
Tube Side	
Outer Diameter (mm)	38
Inner Diameter (mm)	42
Tube Length (m)	5
Area of Tube (m^2)	0.66
Number of Tubes	138
Tube Passes	2
Tube Pitch (Triangular) (mm)	52.5
Tube Bundle Diameter (mm)	359
Tube Side Coefficient (W/m^{2o}C)	1.21×10^3
Shell Side	
Shell Diameter (mm)	799
Baffle Spacing (mm)	399
Number of Baffles	12
Shell Side Coefficient (W/m^{2o}C)	1.71×10^5
U_o (W/m^{2o}C)	723

Table 7.2: Design Specifications of Condenser

Condenser	
Hot Fluid Temperature	
T in (ºC)	51
T out (ºC)	50.17
Cold Fluid Temperature	
t in (ºC)	33
t out (ºC)	42
Ft Factor	0.99
LMTD (ºC)	12.55
U ($W/m^{2o}C$)	700
Area (m^2)	96.50
Tube Side	
Outer Diameter (mm)	38
Inner Diameter (mm)	42
Tube Length (m)	3
Area of Tube (m^2)	0.40
Number of Tubes	244
Tube Passes	2
Tube Pitch (Triangular) (mm)	52.5
Tube Bundle Diameter (mm)	953
Tube Side Coefficient ($W/m^{2o}C$)	$1.11x10^5$
Shell Side	
Shell Diameter (mm)	$1.01\ x10^3$
Baffle Spacing (mm)	504
Number of Baffles	6
Shell Side Coefficient ($W/m^{2o}C$)	742.11
U_o ($W/m^{2o}C$)	531.98

Table 7.3: Design Specifications of Pump

Pump	
Pump Type	Centrifugal
Suction Pressure (kPa)	110.3
Discharge Pressure (kPa)	689.5
Differential Head (kPa)	72.4
NPSH Available (m)	2.5
Volumetric Flow Rate (gpm)	1009.5
Impeller Diameter (inch)	11
Efficiency (%)	73
Power (kW)	51.6

Total heat transfer area requirement for R113 was calculated. Total capital cost is also affected by pressure conditions. As stronger material is required to operate at higher pressure, it adds to capital as well as operating cost of the equipment. So pressure was also taken into account while calculation of total cost.

8

COSTING OF EQUIPMENT

In order to check economic feasibility of the ORC system it was necessary to include both capital and operating cost of the equipment. Cost of the equipment installed in ORC depends upon the type of material selected for operation. Stainless steel was selected for the current operation in heat exchangers as none of the refrigerant was corrosive. The cost of the turbine is directly linked with the power output requirement.

8.1 Heat exchanger

U-tube type heat exchangers were used for the ORC system. Tube and shell side both were made up of stainless steel material. The purchase cost of the equipment was calculated using the following correlation.

Purchase Cost of Equipment (C) = PF x MF x TF x CF

Table 8.1: Correlations of purchase cost

PF	**Pressure Factor**	$0.9803+ 0.018(P/100)+0.0017(P/100)^2$
MF	**Material Factor**	a+ {(Area)/100}^b
TF	**Tube Length Factor**	1
CF	**Base Cost of Equipment**	exp {11.147-
		$0.9186[\ln(Area)]+0.09790[\ln(Area)]^2$}

Pressure used in above correlations is in psia and area is in ft^2. The coefficients 'a' and 'b' for the material factor can be found using the Table 8.2. Tube factor depends upon the length of the tube and is also given in the Table 8.3.

Table 8.2: Material Factors

Material Factor		
Material of Construction of Shell/Tube	**a**	**b**
Carbon Steel/ Carbon Steel	0	0
Carbon Steel/Brass	1.08	0.05
Carbon Steel/ Stainless Steel	1.75	0.13
Carbon Steel/Monel	2.1	0.13
Stainless Steel/ Stainless Steel	2.7	0.07
Monel/Monel	3.3	0.08
Titanium/ Titanium	9.6	0.06

Table 8.3: Tube Factors for costing

Tube Length (ft.)	TF
8	1.25
12	1.12
16	1.05
20 or more	1

The total purchase cost was the product of base cost, material factor, pressure factor and tube factor. In case of ORC the total purchase cost is strongly dependent on base cost as compared to pressure conditions. Following results were obtained.

Table 8.4: Base Costs of Heat exchangers

Condenser	
Base Cost	$ 13,188
Material Factor	3.87
Pressure Factor	0.99
Tube Factor	1.25
Total Purchase Cost	$63,162

Boiler	
Base Cost	$ 12,861
Material Factor	3.87
Pressure Factor	0.99
Tube Factor	1.05
Total Purchase Cost	$ 51,739

Regenerator	
Base Cost	$ 12,861
Material Factor	3.87
Pressure Factor	0.99
Tube Factor	1.05
Total Purchase Cost	$ 35,537

8.2 Turbine and Pump

Capital cost of turbine depends upon the power requirement or the net power being generated from the turbine. Coulson and Richardson Volume 6 was used for costing of turbine. The cost of pump was calculated directly from market survey. The power output for turbine ranged from 25-50 kW with adiabatic efficiency of 75%. Pitched blade turbine was used with temperature range from 150-400 ^{0}C and a speed of 4000-5000 RPM.

8.3 Costing Results

The following were the results of equipment costing.

Table 8.5: Costing Results ORC

Turbine Cost	$ 78,907
Pump Cost	$ 3,100
Heat Exchangers	$ 150,439
Total Equipment	$ 209,770
Fixed Equipment Cost	$ 377,586

8.3.1 Fixed Capital Cost and Annual Operating Cost requirement

Total fixed capital cost of ORC system is not just the equipment cost. It is the sum of costs like piping and instrumentation cost, erection cost, storage cost and many others. Using the correlation from literature (Coulson and Richardson) these costs were calculated. Total Physical cost of system with refrigerant is shown in the Table 8.6

$$\text{Physical Equipment Cost} = \text{Equipment Cost} \times (\mathbf{1+f_1+f_2+f_3})$$

f_1= Piping factor

f_2= Instrumentation factor

f_3= Electric factor

Table 8.6: Total Equipment Cost ORC

Equipment cost ($)	Physical Equipment Cost ($)
377,586	5,474,875

Energy required for running the pumps was used from the total energy being generated. Operating cost includes the maintenance cost and miscellaneous cost.

In order to calculate the breakeven point the total profit generated per year was also calculated by calculating the total energy generated in kilo Watts and comparing it with the industrial unit price in Pakistan. Results obtained are in Table 8.6

Table 8.7: Costing Results

Physical Equipment Cost ($)	Maintenance Cost ($)	Miscellaneous Cost ($)	Total Operating Cost ($)	Power Generated (kW)	Annual Power (MW)	Annual Power ($)	Profit ($)	Break even
5.47M	0.273M	0.0273M	0.301M	1787	14.8	2.33M	2.03M	2.69

9

AMMONIA RANKINE CYCLE

9.1 Introduction

Ammonia Rankine Cycle is also called Kalina cycle. There are two working fluids in the Kalina cycle, Ammonia and Water [11]. In order to decrease the thermodynamic irreversibility the ratio between Ammonia and Water is changed in different parts of the system.

Kalina cycle has been considered as one of the potential replacement or competitor of ORC. Cycle explained in this section is a modification of Rankine cycle (Figure 5.1). The major difference between organic based Rankine cycle and Kalina cycle is the use of working fluid. Working fluid used here is the combination of Ammonia and water.

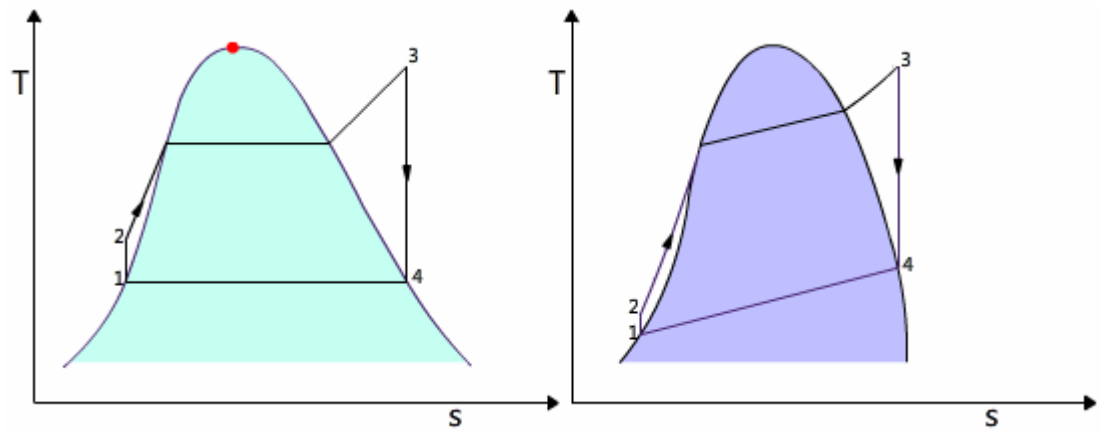

Figure 9.1: T-S Diagram of Rankine Cycle & Ammonia Rankine Cycle

This cycle has an advantage over conventional Rankine cycle that it has one extra degree of freedom. In case of ORC we cannot modify the concentration of the working fluid or refrigerant. In case of ARC we can modify the concentration of Ammonia-water solution but it has one disadvantage also. It needs very high pressure in order to operate and this adds up to additional capital and operating cost of the equipment.

Although Kalina cycle has high thermal efficiency as compared to Organic Rankine Cycle but still there are some economic constraints that administer the choice between these two cycles.

9.2 Principle

Kalina Cycle uses a solution of Ammonia and water at high pressure as a working medium. The major equipment in Kalina cycle is similar to that of ORC but there is an addition of a separator. This addition of separator reduces the cooling requirement of the condenser.

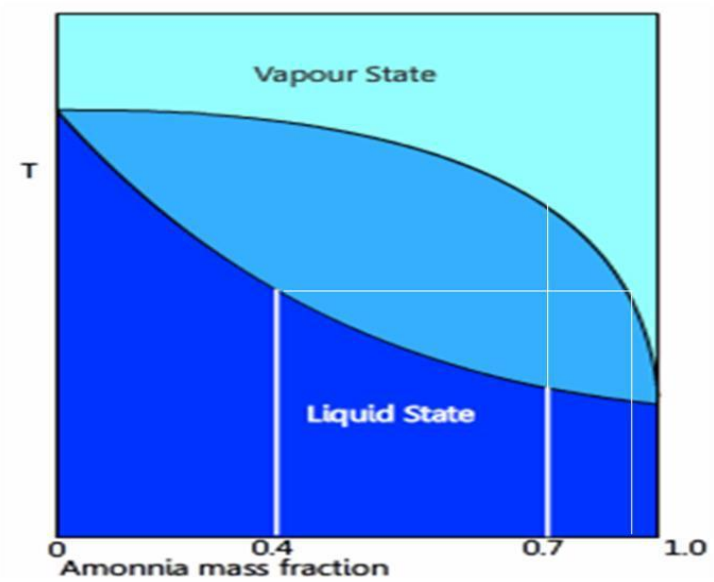

Figure 9.2: Ammonia-Water Composition Diagram

The reason behind this reduction in cooling requirement of condenser is due to the fact that water and ammonia system is non-azeotropic mixture [12]. As a characteristic of such mixtures the temperature and composition changes (Figure 5.2).

Boiling of the mixture can be visualized in the above shown diagram. When the mixture starts to boil the concentration of ammonia in remaining solution also changes.

The vapour phase has higher content of ammonia as compared to liquid phase. The point where the boiling begins is termed as the bubble point. When a solution of 70% Ammonia and 30% water is heated to its bubble point the vapour at this point has a composition of around 92% Ammonia and 8% water whereas the liquid contains 40% Ammonia and 60% Water by mass [13-14].

There is a large difference between the ammonia fraction in both vapour and liquid state. This property can be exploited to ensure a better internal heat exchange in the system. Using one or multiple separators allows us to achieve this goal.

9.3 Concentration dependence of Kalina Cycle

The power output generated and the working conditions of the Kalina cycle depends upon the concentration of Ammonia in the working medium. Higher the concentration of Ammonia in water higher the operating pressure will be. The reason is that higher pressure is required to maintain high concentration Ammonia-water solution in liquid state as compared to low concentration solution.

9.4 Feasibility of ARC

Ammonia Rankine Cycle is a very promising technology but it is not feasible economically.

10

CONCLUSION

10.1 Break Even Analysis

The capital cost of the equipment, annual profit and the net power output was used to calculate the time interval for the return of initial investment made. The net profit per year was calculated by subtracting the operating cost per year from the profit per year. Profit obtained was $2.03 million.

10.2 Conclusion

Using R-113 the power generated was 1787 kW, from low temperature flue gases which was going unused. This power may be used by FFC to run other operations on the plant. Or it can be utilized in the township. The breakeven point that was calculated was 2.69 per year. It is the time period in which the initial investment is returned. Other aspects need to be taken into account before the final selection, like health and safety related problems and HAZOP analysis.

11

HAZOP ANALYSIS

11.1 HAZOP Analysis

A hazard and operability study (HAZOP) is a structured and systematic examination of a complex planned or existing process or operation in order to identify and evaluate problems that may represent risks to personnel or equipment.

Table 11.1 HAZOP Analysis of ORC

Deviation	Consequences	Causes	Existing Protection	Actions items or recommendations
Leakage of working fluid	CFCs released into the atmosphere since R113 is a CFC. Ozone depletion. Can cause trouble if inhaled. Can cause asphyxiation. R113 is inflammable	Improper sealing mechanism. Accidental opening of valve through which working fluid is filled in the system. Unwanted collision of workers or any heavy equipment with the ORC instrument.	Equipment pipes, joints and bends fabricated to a high accuracy. Strong mechanical seals employed.	Display warning signs near the equipment. Use halogen detectors to check for refrigerant going into the atmosphere. Automatic alarm system on spillage of refrigerant. Workers should be educated to evacuate the area if a spillage occurs .

		Loose connections between pipes and instruments. Working fluid moving at a high pressure in the system.		Avoid too high pressure in the pipes by pressure relief valves. Use alternative HFCs that are ozone friendly.
Low exit temperature of flue gases	Backpressure induced in the system.	Very high heat integration of thermal oil with the flue gases. Mass flow rate of thermal oil kept higher than required. Less flue gas produced than anticipated	Accurate calculations carried out in the designing phase of the heat exchanger involving flue gas and thermal oil and tolerances were assumed to ensure that temperature of flue gases does not go below the desired value in the	Pressure and temperature sensors to be employed at the exit of flue gases to ensure that it conforms to the desired operating conditions.

			worst possible scenario.	
Increasing working fluid flow rate	Lesser heat integration. Partial vaporization may occur causing erosion in the turbine.	Inefficient monitoring of the system during working fluid addition. Faulty calculations during the designing phase.	Tolerances allowed in the designing phase for slight deviations in the working fluid quantity.	A demister pad can be employed after the evaporator to ensure there is no entrainment of liquid in the turbine.
Decreasing working fluid flow rate	Higher heat integration than required. Process economics are adversely affected.	Inefficient monitoring of the system during working fluid addition. Faulty calculations during the designing phase. Leakage of the working fluid.	Tolerances allowed in the designing phase for slight deviations in the working fluid quantity.	Easily accessible valves installed for the introduction of working fluid at any point
Improper material of construction	Corrosion occurs and	Long-term storage of	Equipment is ensured	

	ferric chloride can be formed.	refrigerant in carbon-steel containers. Pipes submerged in stagnant water.	not to have any intimate contact with standing water. Working fluid moving at a flow rate of $3.6x10^5$ kg/hr	
Increase in pressure of evaporator	Overall running cost increase. Chances of leakage become severe.	Too high pressure supplied by the pump. Residence time of working fluid higher in the evaporator. Faulty calculations during the designing phase.	Pressure sensors and pressure relief valve employed on the evaporator.	Construction of pipes, tubes and evaporator should be such as to withstand moderate increase in pressure.
Decrease in pressure of evaporator	Less work generated.	Pump used is of less power than required. High pressure losses in	Pump is of suitable power, i.e. 12kW in our case.	A reducer or venturi duct could be used to counter the adverse effects of pressure change.

		piping and bends.		
Partial/inco--mplete vaporization	Erosion in the turbine.	Higher pressure in the evaporator. Low flow rate of working fluid. Low flow rate of flue gases. Poor heat integration. Faulty or non-conducting material of construction used.		A demister pad can be employed after the evaporator to ensure there is no entrainment of liquid in the turbine.
Decrease in flue gas flow rate	Partial Vaporization causing turbine erosion.	Compressor of FFC performs better than usual.	Tolerances allowed in calculations for slight deviations in flow rate.	
Increase in cooling	Increase in cooling duty of	Valve opened more than	Tolerances allowed in	Use PID controllers to

water flow rates.	condenser.	usual. Faulty calculations.	calculations for slight deviations in flow rate.	regulate the flow control accurately.
Decrease in cooling water flow rates.	Partial condensation occurs causing cavitation in the pump.	Valve closed more than usual. Faulty calculations.	Tolerances allowed in calculations for slight deviations in flow rate.	Use PID controllers to regulate the flow accurately.
Cooling water inlet temperature higher	Partial condensation occurs causing cavitation in the pump.	Recirculation loop of cooling water does not cool back the water to the desired temperature.	Tolerances allowed in calculations for slight deviations in temperature.	Use PID controllers to regulate the temperature accurately.

References

[1] Johnson I., and Choate W. T., 2008, "Waste Heat Recovery: Technologies and Opportunities in the U.S. Industry," BCS, Inc.

[2] Larjola J., 1995, "Electricity from Industrial Waste Heat Using High-speed Organic Rankine Cycle (ORC)," International Journal of Production Economics, 41(1-3), pp. 227-235.

[3] Hung T. C., Shai T. Y., and Wang S. K., 1997, "A Review of Organic Rankine Cycles (ORCs) for the Recovery of Low-grade Waste Heat," Energy, 22(7), pp. 661-667.

[4] Liu B.-T., Chien K.-H., and Wang C.-C., 2004, "Effect of Working Fluids on Organic Rankine Cycle for Waste Heat Recovery," Energy, 29(8), pp. 1207-1217.

[5] Radermacher R., 1989, "Thermodynamic and Heat Transfer Implications of Working Fluid Mixtures in Rankine Cycles," International Journal of Heat and Fluid Flow, 10(2), pp. 90-102.

[6] Saleh B., Koglbauer G., Wendland M., and Fischer J., 2007, "Working Fluids for Low-temperature Organic Rankine Cycles," Energy, 32(7), pp. 1210-1221.

[7] Badr O., Probert S. D., and O'Callaghan P. W., 1985, "Selecting a Working Fluid for a Rankine-Cycle Engine," Applied Energy, 21(1), pp. 1-42.

[8] Ganic E. N., and Wu J., 1980, "On the Selection of Working Fluids for OTEC Power Plants," Energy Conversion and Management, 20(1), pp. 9-22.

[9] Marcuccilli F., and Thiolet D., 2010, "Optimizing Binary Cycles Thanks to Radial Inflow Turbines," World Geothermal Congress 2010, Bali, Indonesia.

[10] Facao J., and Oliveira A. C., 2009, "Analysis of Energetic, Design and Operational Criteria When Choosing an Adequate Working Fluid for Small ORC Systems," 2009 International Mechanical Engineering Congress & Exposition, Paper #IMECE2009-12420, ASME, Lake Buena Vista, FL, USA.

[11] I. Kalina, Combined cycle system with novel bottoming cycle. ASME Journal of Engineering for Gas Turbine and Power 106 (1984) 737 e 742A