Project Title:

Design and Analysis of full scale VAWT (vertical axis wind turbine) optimizing it for environmental conditions of PAKISTAN along-with the fabrication of its scaled down prototype.

By

Kamran Saghir	**00250**
Salman Hassan	**00183**
Talha Mukarram	**00250**
Haris Jilani	**00250**

Supervised By

Dr. Liaqat Ali

School of Mechanical and Manufacturing Engineering,

National University of Sciences and Technology (NUST),

Islamabad, Pakistan

June, 2016

Project Title:

Design and Analysis of full scale VAWT (vertical axis wind turbine) optimizing it for environmental conditions of PAKISTAN along-with the fabrication of its scaled down prototype.

By

Kamran Saghir	**00250**
Salman Hassan	**00183**
Talha Mukarram	**00250**
Haris Jilani	**00250**

Supervised By

Dr. Liaqat Ali

A thesis submitted in partial fulfillment of the requirements for the degree of

Bachelors of Engineering in Mechanical Engineering

School of Mechanical and Manufacturing Engineering,

National University of Sciences and Technology (NUST),

Islamabad, Pakistan

June, 2016

National University of Sciences & Technology

FINAL YEAR PROJECT REPORT

We hereby recommend that the dissertation prepared under our supervision by: Kamran Saghir (00250), Salman Hassan (00183), Talha Mukarram (00250), Haris Jilani (00250), Titled: Design and Analysis of full scale VAWT (vertical axis wind turbine) optimizing it for environmental conditions of PAKISTAN along-with the fabrication of its scaled down prototype , be accepted in partial fulfillment of the requirements for the award of Bachelors of Engineering in Mechanical Engineering degree with (_____ grade)

English and format checked by Ms Aamna Hassan, Signature:_________________

Guidance Committee Members

1. Name:__________________________ Signature:_________________

2. Name:__________________________ Signature:_________________

3. Name:__________________________ Signature:_________________

Supervisor's Name:_____________________ Signature:_________________

Date:__________________

____
Head of Department

____
Date

COUNTERSIGNED

Date:_______________

____
Dean/Principal

Declaration

I/We certify that this research work titled "*FYP Title*" is my own work. The work has not been presented elsewhere for assessment. The material that has been used from other sources it has been properly acknowledged / referred.

Signature of Student
Kamran Saghir
00250

Signature of Student
Salman Hassan
NUST Regn No.
00183

Signature of Student
Talha Mukarram
NUST Regn No

Signature of Student
Haris Jilani
NUST Regn No

Copyright Statement

- Copyright in text of this thesis rests with the student author. Copies (by any process) either in full, or of extracts, may be only in accordance with the instructions given by author and lodged in the Library of SMME, NUST. Details may be obtained by the librarian. This page must be part of any such copies made. Further copies (by any process) of copies made in accordance with such instructions may not be made without the permission (in writing) of the author.
- The ownership of any intellectual property rights which may be described in this thesis is vested in SMME, NUST, subject to any prior agreement to the contrary, and may not be made available for use of third parties without the written permission of SMME, NUST which will describe the terms and conditions of any such agreement.
- Further information on the conditions under which disclosure and exploitation may take place is available from the library of SMME, NUST, Islamabad.

Dedicated to my parents

Acknowledgments

First of all I would thank ALLAH Almighty, who gave me knowledge and dedication to be able to complete this research.

Abstract

In recent years, a palpable surge in exploring prospects of alternate solutions to growing energy needs of humanity has been observed. Among the most popular of these means to extract sustainable, environmentally-friendly, and cheap energy is electrical power generation through wind. The work presents a detailed overview of globally prevalent wind turbine designs in general and those of Vertical Axis Wind Turbines in particular. Additionally, a theoretical comparison of common VAWTs against key performance benchmarks has been performed that underscores the merits and demerits of each design and discusses their relative feasibility of operations in urban surroundings with low annual average wind speeds. Furthermore an optimized VAWT design that is not only efficient and cheap but also capable of being deployed in environments with frequent and erratic fluctuations in critical independent variables such as wind speed, turbulence etc. and is, to a fair extent, modular, affordable, and easy to maintain and manufacture. For this purpose, detailed software analysis of most suitable VAWT design (after a detailed scholarly study of major designs) is also performed with an aim to optimize said design for urban conditions of Pakistan. Lastly, a downscale prototype of finalized design is manufactured and tested under real-world conditions in order to cross-check and verify mathematical models and performance standards, draw conclusions, and make future recommendations in this regard.

Table of Contents

List of Figures

Symbols

TSR	Tip Speed Ratio
R	Radius of rotor
L	Length of Blade
S	Swept Area
ρ	Density of Air
V	Ambient Wind Velocity
N	Number of Blades
C	Blade Chord
σ	Solidity
w	Angular velocity

Chapter 1

Introduction

1.1 Background

From earliest recorded periods of human history, mankind has been in a constant search to find, develop, and exploit ways to harness forces of nature present around him. This urge to find dependable, workable, and powerful methods to facilitate his day to day tasks such as grinding grains, pumping water, or simply sailing in seas for trade and fishing has been at the forefront of human creativity and progress. The advent of agricultural age, around 10000 years ago, expedited human efforts to find ingenious ways of channeling the forces of nature towards simplifying his daily chores and provided renewed impetus to them. This led to the development of a number of interesting devices and mechanisms that'll continue to be improved and utilized today, thousands of years later.

Due to its relative conspicuousness, availability over a wide range of geographical terrains, ease of access, and raw force contained therein, the Wind Power understandably became the most widely adopted source of extracting energy.

It started with the invention of sail boats by Egyptians (3500 BC) that utilized wind energy for propulsion. Following the sailing boats, wind-powered grain mills and water pumps were made by Persians (500-900 AD) and Chinese (1200 AD). Eventually, around 1,000 A.D., wind power technology spread north to European countries such as The Netherlands, which adapted windmills to help drain lakes and marshes in the Rhine River Delta. The western world discovered the windmill much later. The earliest written references to working wind machines date from the 12th century. These too were used for milling grain. By 1300, the first horizontal-axis windmills (like a pinwheel) appear in Western Europe to drain fields in the Netherlands and to move water for irrigation in France. Technological improvements allow for superior grinding and pumping. By 1800, American settlers use windmills to pump water along the western frontier. By the late 1880's, six million windmills had sprung up across America. Steel blades found their use in wind turbines which improves efficiency. The first electricity-generating wind turbine was invented in 1888 in Cleveland, Ohio by Charles F. Brush. The turbine's diameter was 17 meters (50 feet), it had 144 rotor blades made of cedar wood, and it generated about 12 kilowatts (kW) of power. Through the beginning of 20th century, Electric wind turbines appeared all over Europe and were used to power rural homes and farms in America.

During the 1920s, French inventor G.J.M. Darrieus developed a vertical axis turbine, consisting of slender, curved blades attached to the top and bottom of a rotating vertical tube. This design is often called an "eggbeater" shape turbine.

In 1931, A precursor to the modern horizontal wind generator was used in Yalta, generating 100kW. The turbine had a 30m tower and a 32% load factor, meaning it provided 32% of its potential energy output, pretty good even by today's standards.

In the 1930s and 1940s, hundreds of thousands of electricity producing wind turbines were built in the U.S. They had two or three thin blades which rotated at high speeds to drive electrical generators. These wind turbines provided electricity to farms beyond the reach of power lines and were typically used to charge storage batteries, operate radio receivers and power a light bulb or two. By the early 1950s, however, the extension of the central power grid to nearly every American household, via the Rural Electrification Administration, eliminated the market for these machines. Wind turbine development lay nearly dormant for the next 20 years.

In 1941,The largest wind turbine of the time operated on a Vermont hilltop known as “Grandpa’s Knob.” Its 1.25 megawatts feed electric power to the local utility network for several months during World War II.

Following the OPEC Oil Embargo of 1973, interest in wind energy resurfaced in response to climbing energy prices and questionable availability of conventional fuels. Federal and state tax incentives and aggressive government research programs triggered the development and use of many new wind turbine designs. Some experimental models were very large. With a blade diameter of 300 feet, a single machine was able to supply enough electricity for 700 homes.

From 1974 through the mid-1980s, the U.S. government worked with industry to advance the technology and enable development and deployment of large commercial wind turbines. Large-scale research wind turbines were developed under a program overseen by the National Aeronautics and Space Administration to create a utility-scale wind turbine industry in the United States. With funding from the National Science Foundation and later the U.S. Department of Energy, 13 experimental turbines were put into operation using four major wind turbine designs. This research and development program pioneered many of the multi-megawatt turbine technologies in use today. The large wind turbines developed under this program set several world records for diameter and power output. In 1985, California wind capacity exceeded 1,000 megawatts, enough to power 250,000 homes.

Wind turbines were still very inefficient at this time. Federal funding for wind power research had been declining through the 1980’s. The Department of Energy (DOE) funding for this research reached a low point in 1989. In the 1990s, Growing public concerns about environmental issues such as air pollution and global warming encourage interest in renewable energy.

In 2001, Wind energy capacity increased 37 percent, reaching 24,800 megawatts. The global wind power industry generated about $7 billion in business.

Partly due to increasing concerns for a cleaner environment and sustainable development, and incentives provided by the government, the global wind energy production continues to grow exponentially and by 2006, Global wind energy production exceeds 74,000 megawatts, by 2008, exceeds 94,000 megawatts, and by 2009, provides 2 percent of worldwide electricity usage.

In 2010 Cape Wind was nearing construction to become America’s first offshore wind farm. Cape Wind would consist of 130 Siemens 3.6-megawatt offshore wind turbines with a capacity of 468 megawatts. The project would be located in Federal waters off the coast of

Cape Cod, Massachusetts, on Horseshoe Shoal in Nantucket Sound, the most technically optimal offshore wind power site in the United States.

1.2 Aim and Objectives

The aim of this project is to study different types of Wind Turbine Designs, compare these designs against core performance benchmarks i.e Efficiency, Adaptability to different environmental conditions, Cost of Production, etc., developing a low cost effective design, its prototype manufacturing and testing. The objectives of this project can be summed up in following key points.

I. Designing and Manufacturing a Wind Turbine that maximizes efficiency by tweaking and optimizing relevant variables such as blade length, blade profile, chord length, angle of attack, cutoff wind speed etc.

II. Designing a Wind Turbine that is suited to the environmental conditions of Pakistan and can easily be manufactured, and installed in urban as well as rural settings.

III. Keeping the cost of Manufacturing substantially low so as to make it economically feasible for domestic users and widely adoptable without compromising over its durability and performance.

IV. Actual testing and evaluation of the prototype for validation.

1.3 Research Methodology

The schematic of overall research methodology is shown in Figure 1.1.

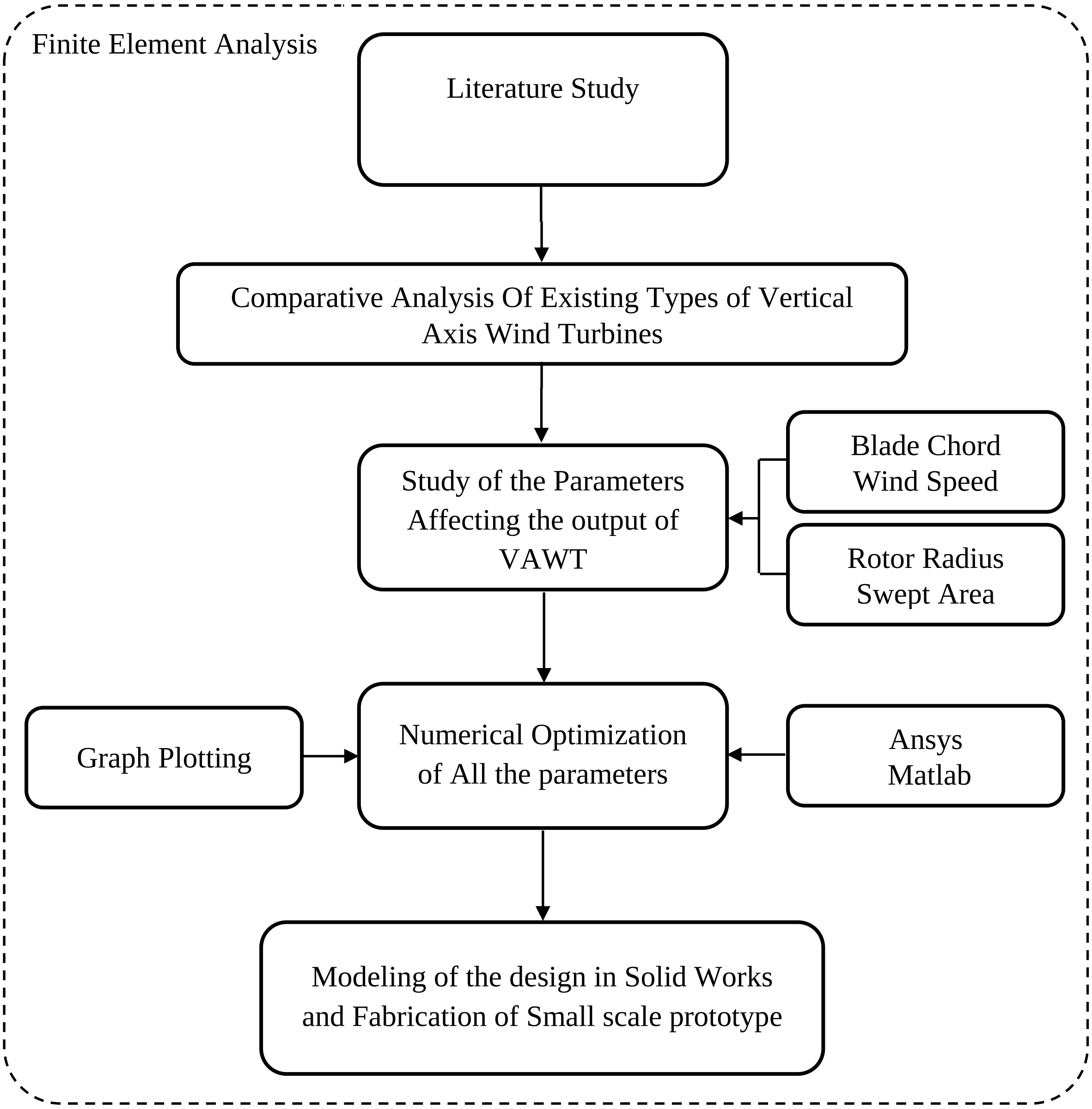

Figure 1.1: Overall Schematic of Research Methodology

1.4 Thesis Structure

The brief description of the contents of the remaining chapters in thesis is described below.

Error! Reference source not found. **Calculations:** Chapter provides a summary of the literature that has been reviewed and identified to be relevant to this research. In this chapter, calculations regarding the net energy output, and performance of the VAWT have been made and analyzed.

Error! Reference source not found. **Design:** In this chapter the process of designing the VAWT using CAD software is detailed. Furthermore, comprehensive software analysis from a number of prespectives such as CFD, Strength test, and Stress analysis has been perfomed. In the end a suitable and optimized deign is developed which will later serve as the foundation for the subsequent stages of this project i.e Manufacturing and Testing.

Error! Reference source not found. **Results and Analysis:** The results of the optimization process for selected VAWT design has been discussed in this chapter. Its results are catalogued and explained. Additionally, the process of manufacturing also included in this chapter which leads to its Testing and data/calculations verifications.

Chapter 4 Conclusions and Future Work: This chapter presents the conclusion of the conducted research and fabrication process along with the proposed future work.

Chapter 2

An Overview of Wind Turbines

A basic overview of the most common types of VAWTs is presented below.

Types of Wind Turbines

Wind turbines are classified into two general types: horizontal axis and vertical axis. A horizontal axis machine has its blades rotating on an axis parallel to the ground. A vertical axis machine has its blades rotating on an axis perpendicular to the ground. There are a number of available designs for both and each type has certain advantages and disadvantages. However, compared with the horizontal axis type, very few vertical axis machines are available commercially.

Horizontal Axis Wind Turbines (HAWTs)

Horizontal axis wind turbines, also shortened to HAWT have blades that look like a propeller that spin on the horizontal axis. These turbines have the main rotor shaft and electrical generator at the top of a tower, and they must be pointed into the wind. Small turbines are pointed by a simple wind vane placed square with the rotor (blades), while large turbines generally use a wind sensor coupled with a servo motor to turn the turbine into the wind. Most large wind turbines have a gearbox, which turns the slow rotation of the rotor into a faster rotation that is more suitable to drive an electrical generator.

Since a tower produces turbulence behind it, the turbine is usually pointed upwind of the tower. Wind turbine blades are made stiff to prevent the blades from being pushed into the tower by high winds. Additionally, the blades are placed a considerable distance in front of the tower and are sometimes tilted up a small amount.

Downwind machines have been built, despite the problem of turbulence, because they don't need an additional mechanism for keeping them in line with the wind. Additionally, in high winds the blades can be allowed to bend which reduces their swept area and thus their wind resistance. Since turbulence leads to fatigue failures, and reliability is so important, most HAWTs are upwind machines.

A Typical Outlook of Modern Day HAWTs[1]

Types of Horizontal Axis Wind Turbines

HAWTS are broadly classified into two major categories as elaborated below.

Upwind Turbine

The upwind turbine is a type of turbine in which the rotor faces the wind[2]. A vast majority of wind turbines have this design. Its basic advantage is that it avoids the wind shade behind the tower. On the other hand, its basic drawback is that the rotor needs to be rather inflexible, and placed at some distance from the tower. In addition, this kind of HAWT also needs a yaw mechanism to keep the rotor facing the wind.

Downwind Wind Turbine

The downwind turbine is a turbine in which the rotor is on the downwind side (lee side) of the tower. It has the theoretical advantage that they may be built without a yaw mechanism, considering that their rotors and nacelles have the suitable design that makes the nacelle

---

[1] http://cleantechnica.com/2014/04/21/real-innovation-wind-energy/

[2] "upwind turbine". The Encyclopedia of Alternative Energy and Sustainable Living. Worlds of David Darling. 8 March 2011.

follow the wind passively.[3] Another advantage is that the rotor may be made more flexible. Its basic drawback, on the other hand, is the fluctuation in the wind power due to the rotor passing through the wind shade of the tower.

Advantages of HAWTs

- Variable blade pitch, which gives the turbine blades the optimum angle of attack. Allowing the angle of attack to be remotely adjusted gives greater control, so the turbine collects the maximum amount of wind energy for the time of day and season.
- The tall tower base allows access to stronger wind in sites with wind shear. In some wind shear sites, every ten meters up, the wind speed can increase by 20% and the power output by 34%.
- High efficiency, since the blades always move perpendicularly to the wind, receiving power through the whole rotation. In contrast, all vertical axis wind turbines, and most proposed airborne wind turbine designs, involve various types of reciprocating actions, requiring airfoil surfaces to backtrack against the wind for part of the cycle. Backtracking against the wind leads to inherently lower efficiency.

Disadvantages of HAWTs

- Taller masts and blades are more difficult to transport and install. Transportation and installation can now cost 20% of equipment costs.
- Stronger tower construction is required to support the heavy blades, gearbox, and generator.
- Reflections from tall HAWTs may affect side lobes of radar installations creating signal clutter, although filtering can suppress it.
- Mast height can make them obtrusively visible across large areas, disrupting the appearance of the landscape and sometimes creating local opposition.
- Downwind variants suffer from fatigue and structural failure caused by turbulence when a blade passes through the tower's wind shadow (for this reason, the majority of HAWTs use an upwind design, with the rotor facing the wind in front of the tower).
- They require an additional yaw control mechanism to turn the blades toward the wind.

Types of VAWTs

The VAWT designs have evolved to take a variety of forms which will be overviewed below. Each of these designs has its own merits and demerits that necessitate a detailed comparative study on part of designers and end users to help them choose the type best suited to their requirements. In this document, increased ficus will be placed upon Darrieus and Savonius type VAWT designs as the concepts from these desings will form the core of our study and subsequent manufacturing.

---

[3] "downwind wind turbine". The Encyclopedia of Alternative Energy and Sustainable Living. Worlds of David Darling. 8 March 2011.

Darrieus Type

Darrieus-style vertical axis wind turbines have aerodynamic blades which fly through the wind on their power strokes as they rotate around a shaft. As the name applies, this design was patented by Georges Jean Marie Darrieus, a French aeronautical engineer in 1931. A Darrieus wind turbine consists of a number of curved aerofoil blades mounted on a vertical rotating shaft or framework. The curvature of the blades allows the blade to be stressed only in tension at high rotating speeds. There are several closely related wind turbines that use straight blades.

When the Darrieus rotor is spinning, the aerofoils are moving forward through the air in a circular path. Relative to the blade, this oncoming airflow is added vectorially to the wind, so that the resultant airflow creates a varying small positive angle of attack (AoA) to the blade. This generates a net force pointing obliquely forwards along a certain 'line-of-action'. This force can be projected inwards past the turbine axis at a certain distance, giving a positive torque to the shaft, thus helping it to rotate in the direction it is already travelling in. The aerodynamic principles which rotate the rotor are equivalent to that in autogiros, and normal helicopters in autorotation.

As the aerofoil moves around the back of the apparatus, the angle of attack changes to the opposite sign, but the generated force is still obliquely in the direction of rotation, because the wings are symmetrical and the rigging angle is zero. The rotor spins at a rate unrelated to the windspeed, and usually many times faster. The energy arising from the torque and speed may be extracted and converted into useful power by using an electrical generator.

The aeronautical terms lift and drag are, strictly speaking, forces across and along the approaching net relative airflow respectively, so they are not useful here. We really want to know the tangential force pulling the blade around, and the radial force acting against the bearings.

When the rotor is stationary, no net rotational force arises, even if the wind speed rises quite high—the rotor must already be spinning to generate torque. Thus the design is not normally self-starting. Under rare conditions, Darrieus rotors can self-start, so some form of brake is required to hold it when stopped.

One problem with the design is that the angle of attack changes as the turbine spins, so each blade generates its maximum torque at two points on its cycle (front and back of the turbine). This leads to a sinusoidal (pulsing) power cycle that complicates design. In particular, almost all Darrieus turbines have resonant modes where, at a particular rotational speed, the pulsing is at a natural frequency of the blades that can cause them to (eventually) break. For this reason, most Darrieus turbines have mechanical brakes or other speed control devices to keep the turbine from spinning at these speeds for any lengthy period of time.

Another problem arises because the majority of the mass of the rotating mechanism is at the periphery rather than at the hub, as it is with a propeller. This leads to very high centrifugal stresses on the mechanism, which must be stronger and heavier than otherwise to withstand them. One common approach to minimise this is to curve the wings into an "egg-beater" shape (this is called a "troposkein" shape, derived from the Greek for "the shape of a spun rope") such that they are self-supporting and do not require such heavy supports and mountings. See. Fig. 1.

In this configuration, the Darrieus design is theoretically less expensive than a conventional type, as most of the stress is in the blades which torque against the generator located at the bottom of the turbine. The only forces that need to be balanced out vertically are the compression load due to the blades flexing outward (thus attempting to "squeeze" the tower), and the wind force trying to blow the whole turbine over, half of which is transmitted to the bottom and the other half of which can easily be offset with guy wires.

By contrast, a conventional design has all of the force of the wind attempting to push the tower over at the top, where the main bearing is located. Additionally, one cannot easily use guy wires to offset this load, because the propeller spins both above and below the top of the tower. Thus the conventional design requires a strong tower that grows dramatically with the size of the propeller. Modern designs can compensate most tower loads of that variable speed and variable pitch.

In overall comparison, while there are some advantages in Darrieus design there are many more disadvantages, especially with bigger machines in the MW class. The Darrieus design uses much more expensive material in blades while most of the blade is too close to the ground to give any real power. Traditional designs assume that wing tip is at least 40m from ground at lowest point to maximize energy production and lifetime. So far there is no known material (not even carbon fiber) which can meet cyclic load requirements.

Savonius Type

Savonius wind turbines were invented by the Finnish engineer Sigurd J. Savonius in 1922, but Johann Ernst Elias Bessler (born 1680) was the first to attempt to build a horizontal windmill of the Savonius type in the town of Furstenburg in Germany in 1745. Nowadays they are not usually connected to electric power grids.

The Savonius is a drag-type VAWT, so it cannot rotate faster than the wind speed. This means that the tip speed ratio is equal to 1 or smaller, making this turbine not very suitable for electricity generation. Moreover, the efficiency is very low compared to other types, so it can be employed for other uses, such as pumping water or grinding grain. Much of the swept area of near the ground, making the overall energy extraction less effective due to lower wind speed at lower heights.

Its best qualities are the simplicity, the r well also at low wind speed because the torque is very high especially in these conditions. However the torque is not constant, so often some improvements like helical shape are used.

A typical Modern Day Savonius Wind Turbine[4]

---

[4] http://www.archiexpo.com/prod/windside/product-88530-959470.html

Giromil Type

The straight-bladed wind turbine, also named Giromill or H-rotor, is a type of vertical axis wind turbine developed by Georges Darrieus in 1927. This kind of VAWT has been studied by the Musgrove’s research team in the United Kingdom during the ’80.

In these turbines the “egg beater” blades of the common Darrieus are replaced with straight vertical blade sections attached to the central tower with horizontal supports. These turbines usually have 2 or 3 vartical airfoils. The Giromill blade design is much simpler to build, but results in a more massive structure than the traditional arrangement and requires stronger blades. In these turbines the generator is located at the bottom of the tower and so it can be heavier and bigger than a common generator of a HAWT and the tower can have a lighter structure. While it is cheaper and easier to build than a standard Darrieus turbine, the Giromill is less efficient and requires motors to start. However these turbines work well in turbulent wind conditions and represent a good option in those area where a HAWT is unsuitable.

The operation way of a Giromill VAWT is not different from that of a common Darrieus turbine. The wind hits the blades and its velocity is split in lift and drag component. The resultant vector sum of these two component of the velocity makes the turbine rotate. The swept area of a Giromill wind tubine is given by the length of the blades multiplied for the rotor diameter. The aerodynamics of the Giromill is like the one of the common Darrieus turbine (Figure 2-2): the wind force is splited in lift and drag force and it make the tubine rotate.

Cycloturbine

A variant of the Giromill is the Cycloturbine, which uses a vane to mechanically orient the pitch of the blades for the maximum efficiency. In the Cycloturbines the blades are mounted so they can rotate around their vertical axis. This allows the blades to be pitched so that they always have some angle of attack relative to the wind.

The main advantage of this design is that the torque generated remains almost constant over a wide angle and so the Cycloturbines with 3 or 4 blades have a fairly constant torque. Over this range of angles the torque is near the maximum possible and so the system can generated more power. Compared with the other Darrieus wind turbines, these kind of VAWT shows the advantage of a self-starting: in low wind conditions, the blades are pitched flat against the wind direction and they generated the drag forces that let the turbine start turning. As the rotational speed increases, the blades are pitched so that the wind flows across the airfoils generating the lift forces and accelerating the turbine. The blade pitching mechanism is complex and usually heavy, and the Cycloturbines need some wind direction sensors to pitch the blades properly.

A Typical Cycloturbine[5]

Reasons for Choosing VAWTs over HAWTs

- Vertical Axis Wind Turbines can be installed close to the ground so it does not require elevated stations like rooftops, hills, ridges, etc. to function.
- Since VAWT are mounted closer to the ground they make maintenance easier, reduce the construction costs, are less harming to birds and other wildlife.
- Since VAWTs are omnidirectional, one does not need any mechanisms in order to constantly orient it's blades towards changing wind directions.
- VAWTs require lower wind startup speed.
- Compared with HAWTs, VAWTs have the ability to function relatively better in turbulent wind conditions.
- VAWTs are aesthetically more pleasing to eye and leave the surrounding landscape relatively unscathed.
- VAWT's are quiet, efficient, economical and perfect for domestic applications/residential energy production, especially in urban environments.
- They are generally more cost effective as compared to the HAWTs.

Reasons for Choosing Darrieus Type Wind Turbine

- Darrieus design is theoretically less expensive than a conventional type.

---

[5] http://www.fieldlines.com/index.php?topic=129002.27

- As most of the stress is in the blades which torque against the generator located at the bottom of the turbine. The only forces that need to be balanced out vertically are the compression load due to the blades flexing outward (thus attempting to "squeeze" the tower), and the wind force trying to blow the whole turbine over, half of which is transmitted to the bottom and the other half of which can easily be offset with guy wires.
- By contrast, a conventional design has all of the force of the wind attempting to push the tower over at the top, where the main bearing is located. Additionally, one cannot easily use guy wires to offset this load, because the propeller spins both above and below the top of the tower. Thus the conventional design requires a strong tower that grows dramatically with the size of the propeller. Modern designs can compensate most tower loads of that variable speed and variable pitch.

Calculations

1.1 Wind Turbine Parameters

Following are the Wind turbine parameters considered in the calculations process:

- Swept Area
- Theoretical Power Output
- Tip Speed Ratio
- Blade Chord
- Number of Blades
- Solidity

Swept Area:

The swept are is the section of air that encloses the turbine in its movement, the shape of the swept area depends upon the rotor configuration. The swept are of HAWT is circular in shape whereas the swept are of VAWT is rectangular and calculated by:

$$S= 2\ R\ L$$

Where S = Swept Area

R = Radius of rotor

L = Length of Blade

Theoretical Power Output:

Theoretical Power Output of a VAWT is given by:

$$P = ½ * p * S * v^3$$

Where P = Theoretical power output

P = Density of Air

S = Swept area

V = Ambient wind velocity

Tip Speed Ratio:

The ratio between the tangential speed at blade tip and the actual wind speed is known as Tip speed ratio:

$$TSR = R w / v$$

Where TSR = Tip speed ratio

R = Rotor radius

W = angular speed

V = actual wind speed

Blade Chord:

The length between leading edge and trailing edge of the blade profile is known as blade chord. The blade thickness and shape is determined by the airfoil used, in this case it will be NACA 0021 airfoil. Where the blade curvature and maximum thickness are defined as percentage of the chord i-e 21%

Number of Blades:

The smoothness of rotor operation is directly linked with the number of blades attached as they can compensate cycled aerodynamic loads. It’s also a tradeoff between economy and noise where the lower number of blades has increased noise effect and greater number of blades costs more.

Solidity:

Solidity is defined as the ratio between the total blade are and the projected turbine area. It effects self-starting behavior and is calculated by :

$$\text{Solidity} = NC / R$$

Where N = Number of blades

C = Blade chord

R = Rotor radius

There were two constraints for our design parameters:

1. Our design has to be economical.
2. The turbine should deliver reasonable amount of power depending upon the theoretical power available in the existing conditions of urban area.

Following relations were discovered through detailed literature study and comparative analysis of wind turbine parameters:

1. Thickness of the blade is directly proportional to the self-starting behavior of the turbine.
2. Coefficient of performance increases with the increase in rotor radius for a certain Tip Speed Ratio then it drops dramatically.
3. Coefficient of performance increases with the increase in ambient velocity for a certain Tip Speed Ratio then it drops dramatically.

4. Coefficient of performance increases with the increase in blade chord for a certain Tip Speed Ratio then it drops dramatically.

5. Coefficient of performance increases with the increase in Tip Speed Ratio up to a certain point then it drop down dramatically.

6. Torque increases with the increase in rotor radius for a certain Tip Speed Ratio then it drops dramatically.

7. Torque increases with the increase in ambient velocity for a certain Tip Speed Ratio then it drops dramatically.

8. Torque increases with the increase in blade chord for a certain Tip Speed Ratio then it drops dramatically.

9. Torque increases with the increase in Tip Speed Ratio up to a certain point then it drops dramatically.

Above mentioned relations are based on the following results of the analysis:

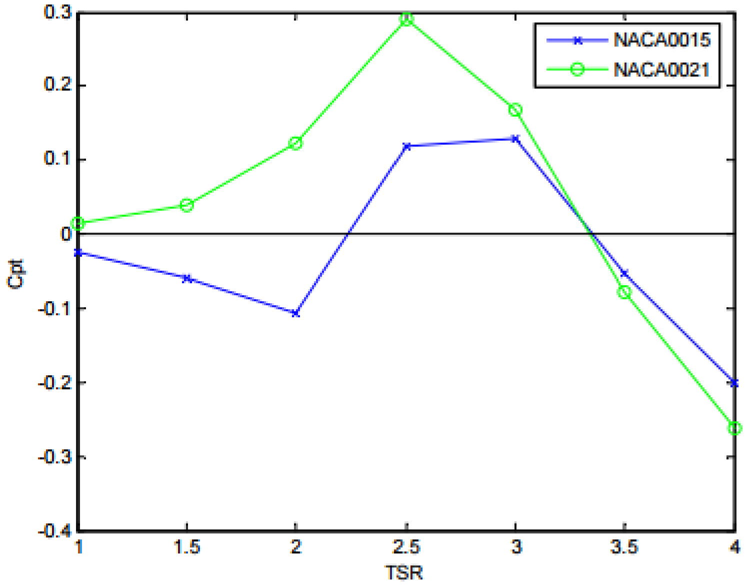
NACA0015
NACA0021
Cpt
TSR
0.3
0.2
0.1
0
-0.1
-0.2
-0.3
-0.4
1
1.5
2
2.5
3
3.5
4

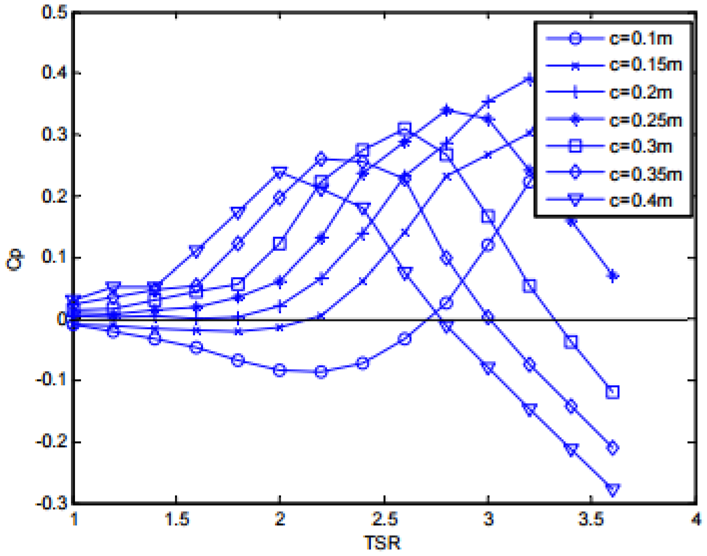
c=0.1m
c=0.15m
c=0.2m
c=0.25m
c=0.3m
c=0.35m
c=0.4m
Cp
TSR
0.5
0.4
0.3
0.2
0.1
0
-0.1
-0.2
-0.3
1
1.5
2
2.5
3
3.5
4

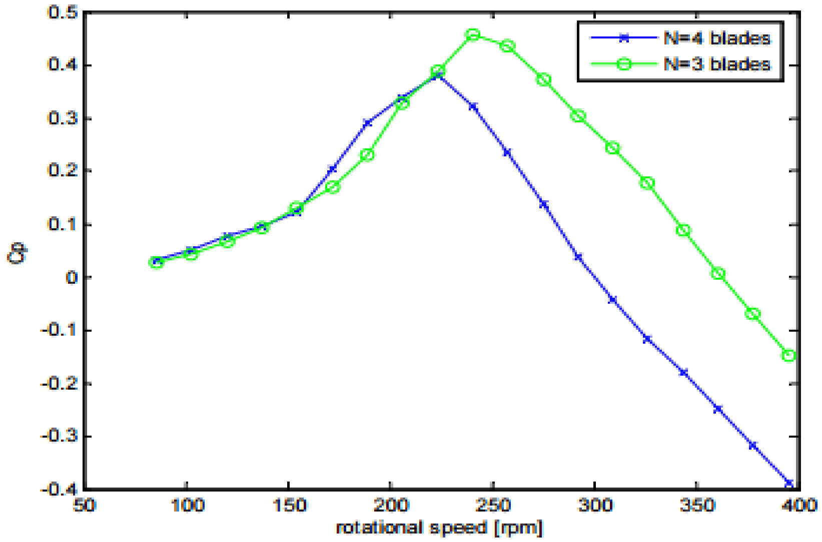
N=4 blades
N=3 blades
Cp
0.5
0.4
0.3
0.2
0.1
0
-0.1
-0.2
-0.3
-0.4
50
100
150
200
250
300
350
400
rotational speed [rpm]

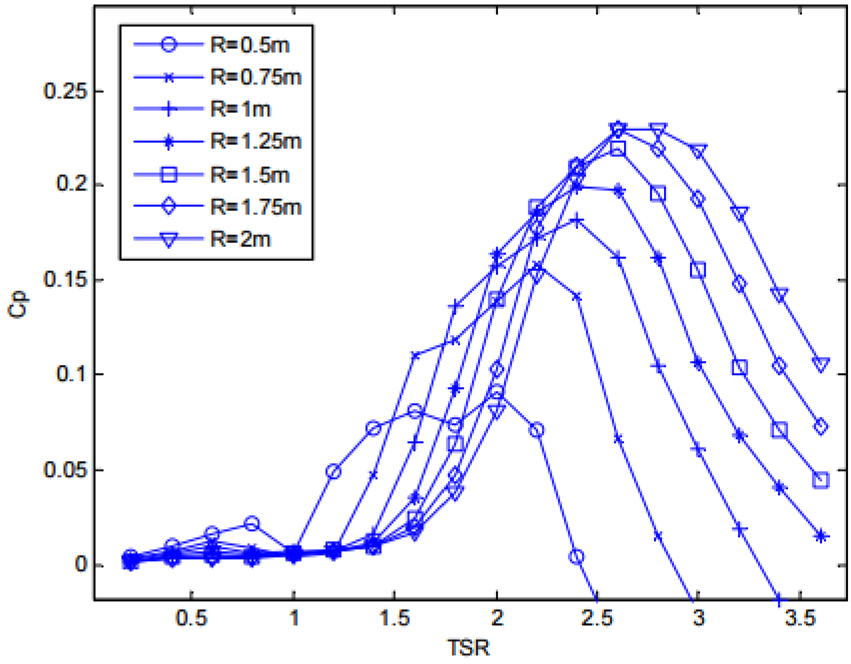
R=0.5m
R=0.75m
R=1m
R=1.25m
R=1.5m
R=1.75m
R=2m
Cp
0.25
0.2
0.15
0.1
0.05
0
0.5
1
1.5
2
2.5
3
3.5
TSR

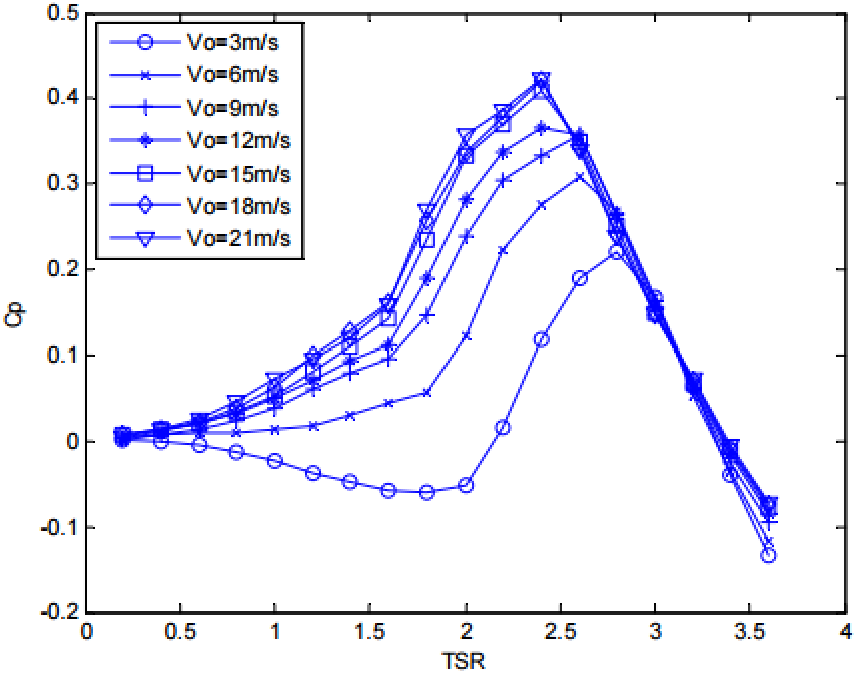

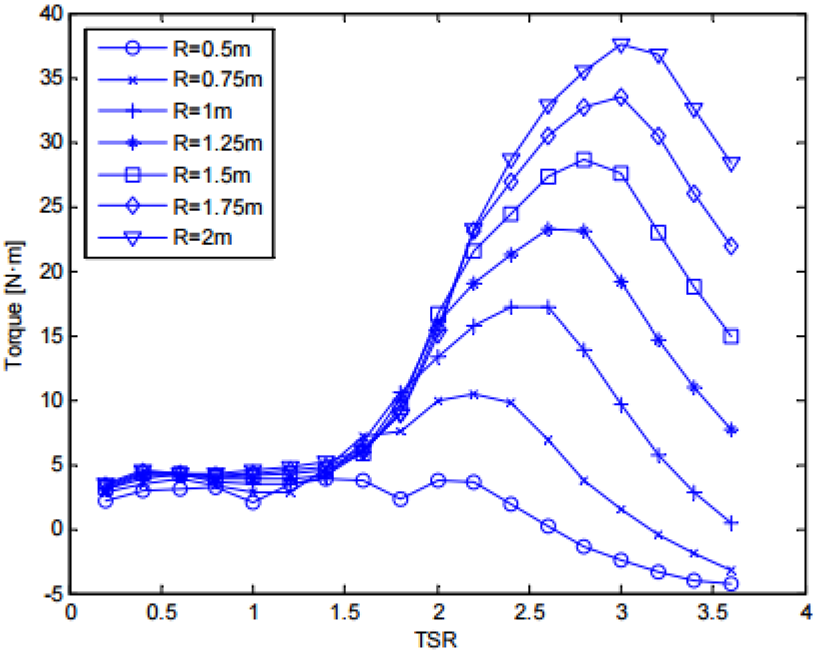

Following are the parameters which were selected for the Wind Turbine Design:

- Blade Length: 1m
- Tip Speed Ratio: 2
- Blade Chord: 0.3m
- No. of Blades: 3
- Rotor Diameter: 1m
- Shaft Length: 2m
- Swept area: $1m^2$

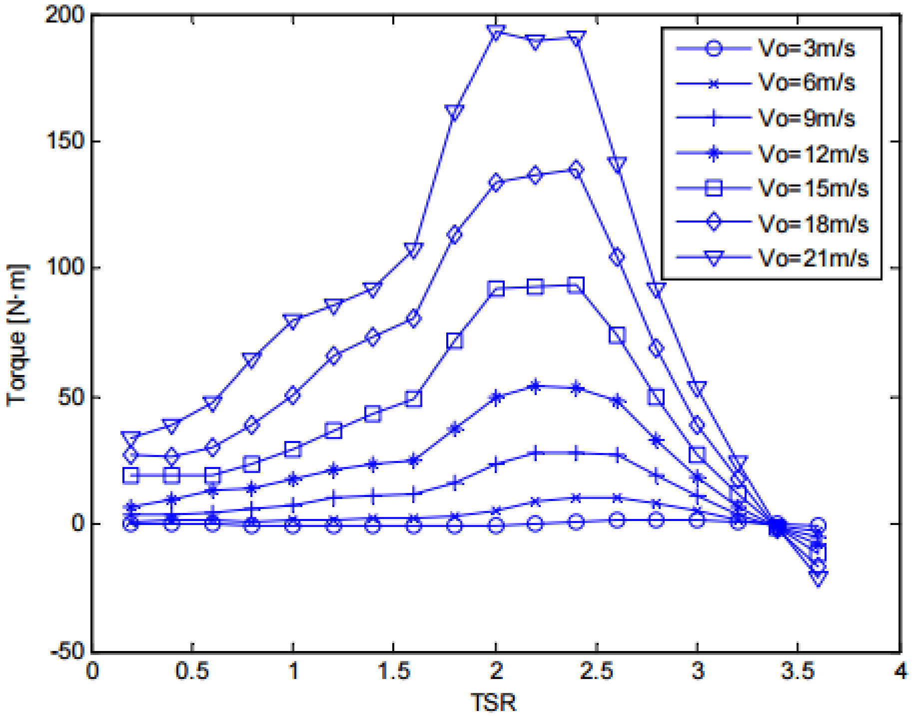

Following are the parameters which were selected for the Wind Turbine Design:

- Blade Length: 1m
- Tip Speed Ratio: 2
- Blade Chord: 0.3m
- No. of Blades: 3
- Rotor Diameter: 0.5m
- Shaft Length: 2m
- Swept area: $1m^2$

Based on above parameters the theoretically available power in the wind is calculated by:

Theoretical Available Power (P) = 0.5 x (density of air) x (swept area) x (velocity)3

= 0.5 x 1.225 x 1 x 53

= 76.56 W

According to Albert Betz a German Scientist, there is a theoretical limit in the efficiency of a wind turbine determined by the deceleration the wind suffers when going across the turbine , for VAWT the limit is 64%.

So considering this , maximum output power will become:

Maximum Theoretically Extracted Power = 0.64 x 76.56

= 49 W

Using the similar calculations as above, following graph is obtained at different velocities of air:

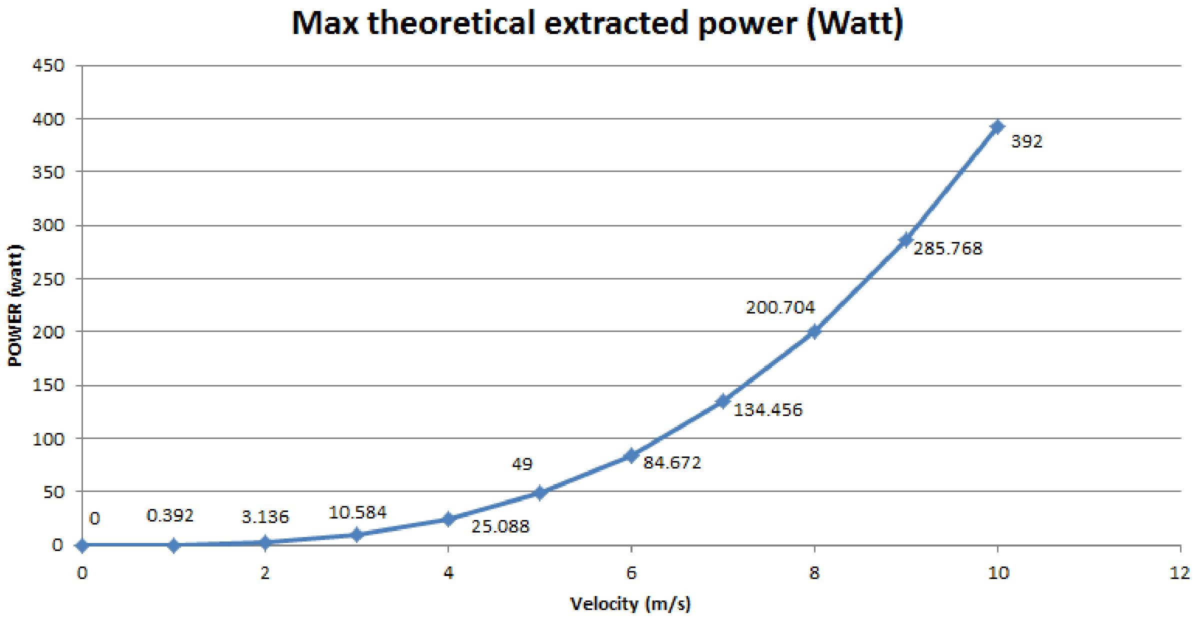

Now after this the electricity generation efficiency of the generator will come into account. That is roughly taken to be 85%.

Chapter 2

Design

2.1 Introduction

Based on the above calculations, The Vertical Axis Wind Turbine was designed on Solid Works. Following were the main parameters of the VAWT:

:

- Blade Length: 1m
- Tip Speed Ratio: 2
- Blade Chord: 0.3m
- No. of Blades: 3
- Rotor Diameter: 0.5m
- Shaft Length: 2m
- Swept area: $1m^2$

2.2 2D Drawings

2D drawings of the parts are made using Solid Works.

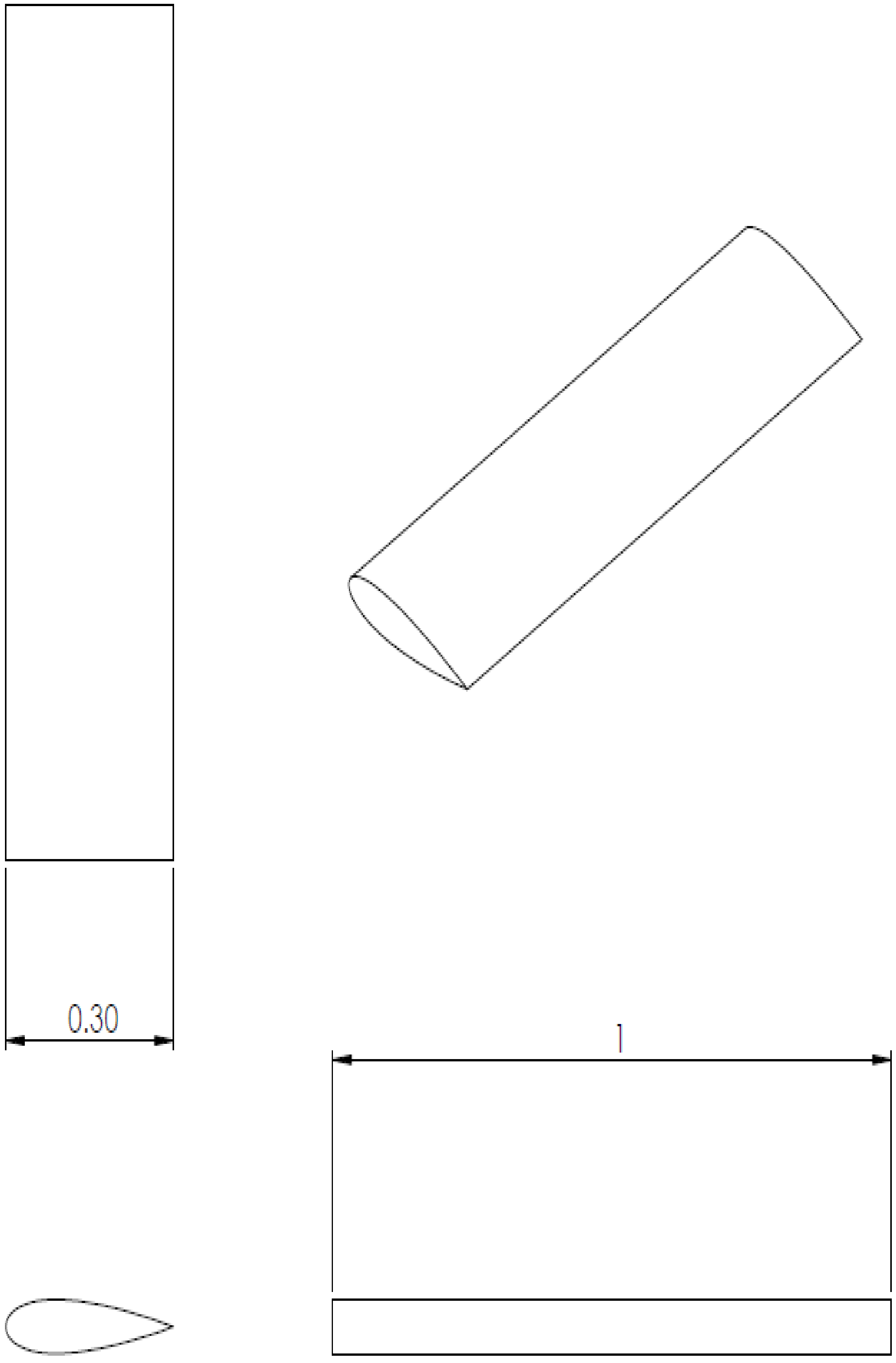
0.30
1

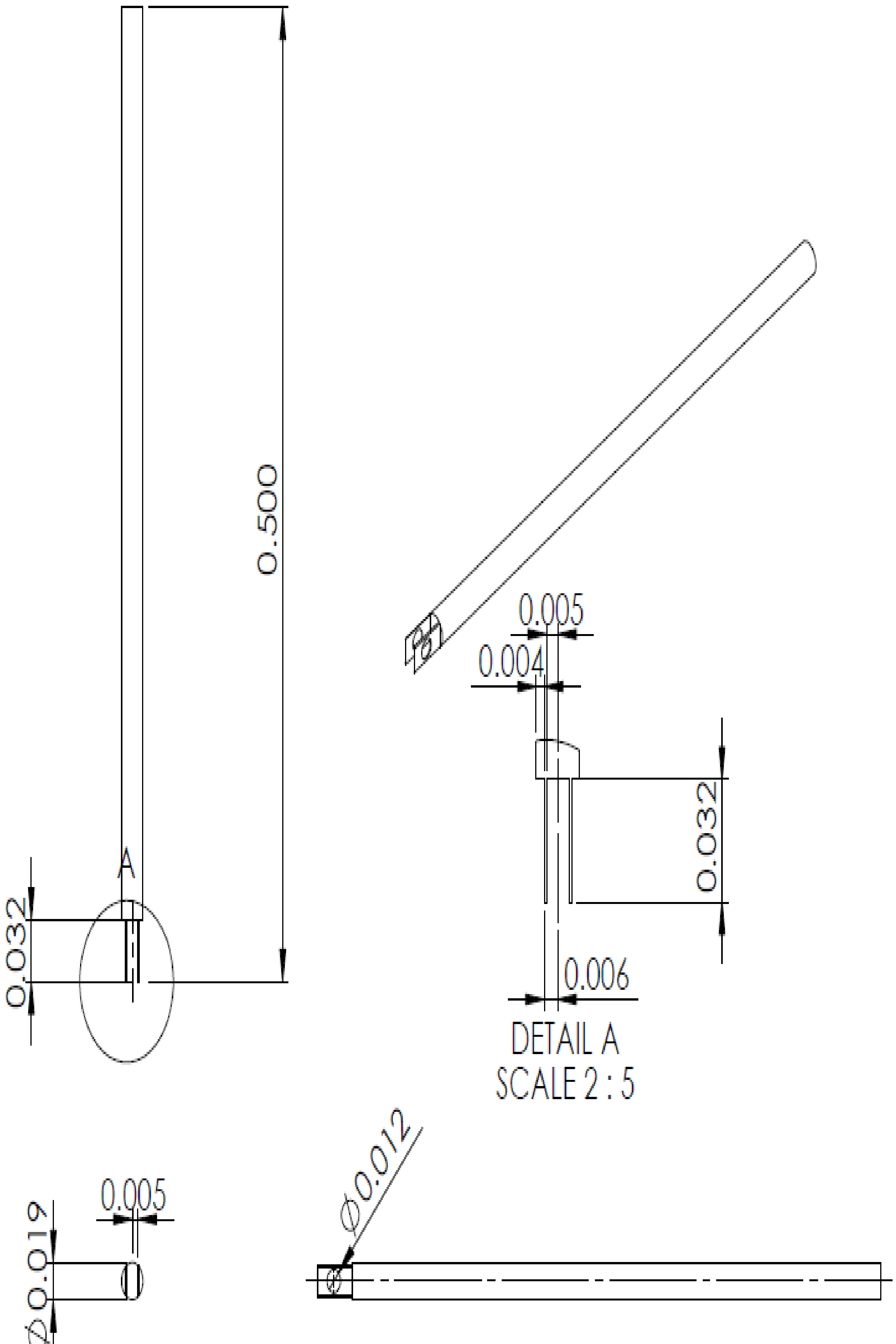
0.500
A
0.032
0.005
0.004
0.032
0.006
DETAIL A
SCALE 2 : 5
0.005
Ø0.019
Ø0.012

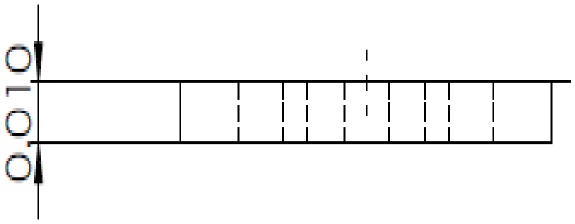
0.010

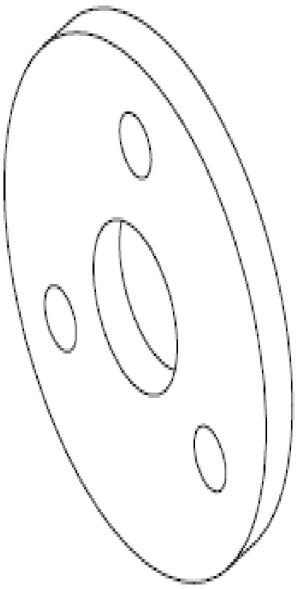

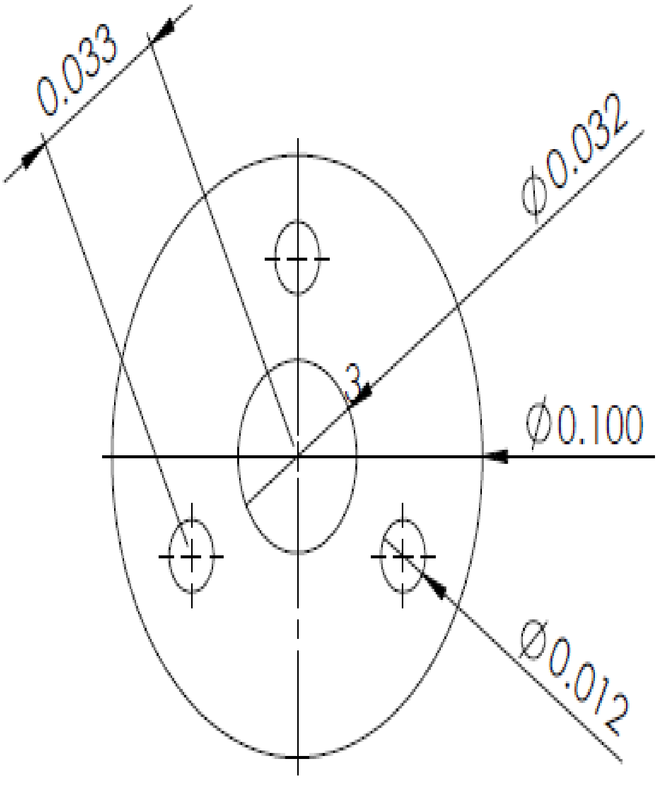
0.033
⌀0.032
3
⌀0.100
⌀0.012

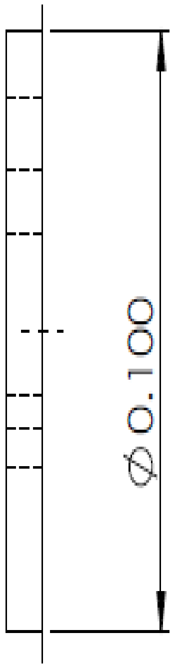
⌀0.100

2.3 Designed Geometry and Configuration

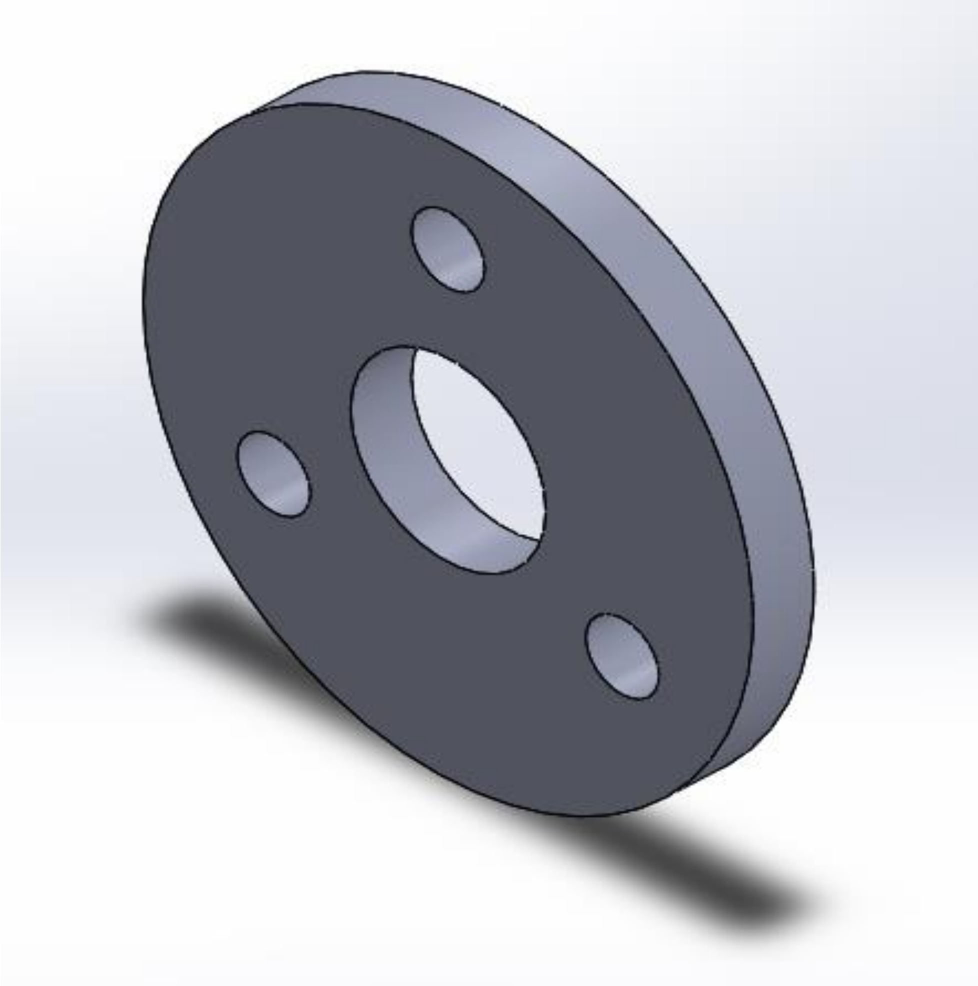

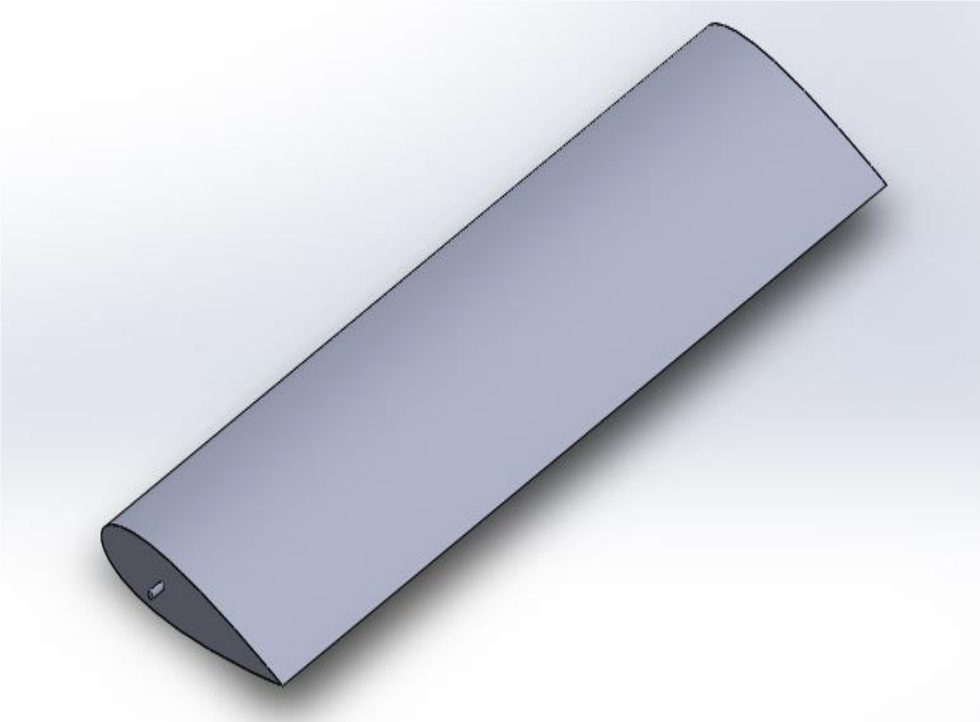

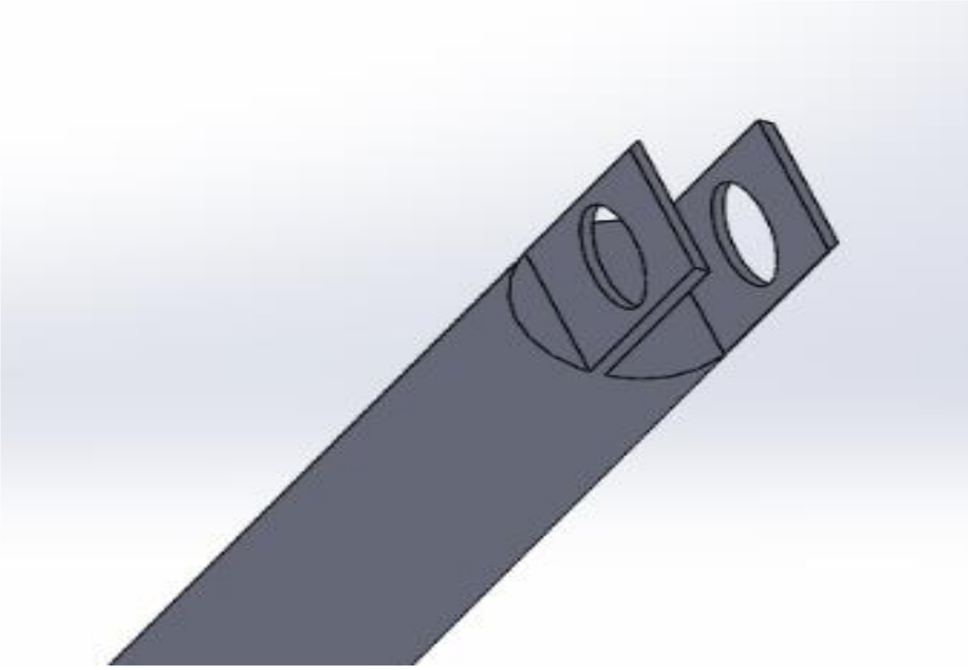

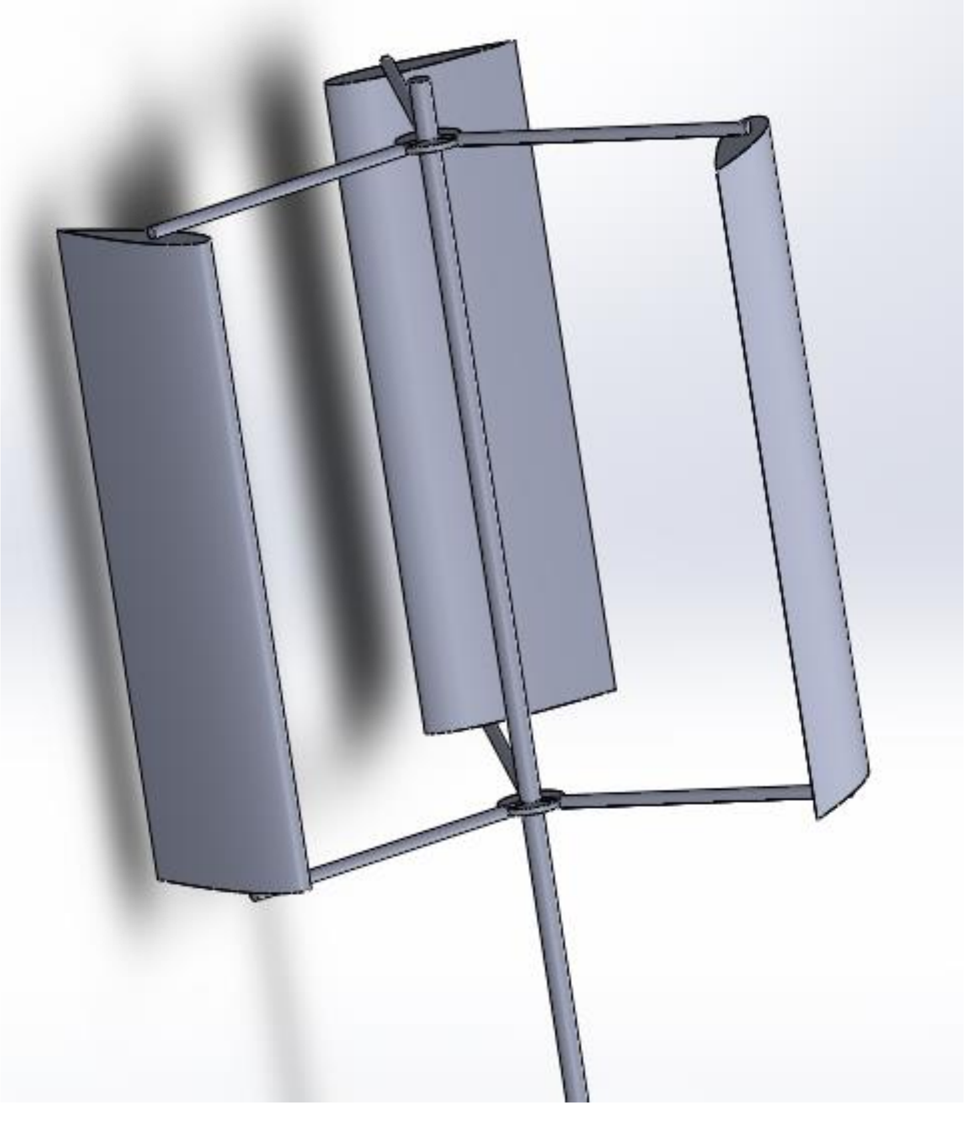

Chapter 3

Analysis and Results

3.1 Blade Pressure Contours and Stress analysis on connecting rods

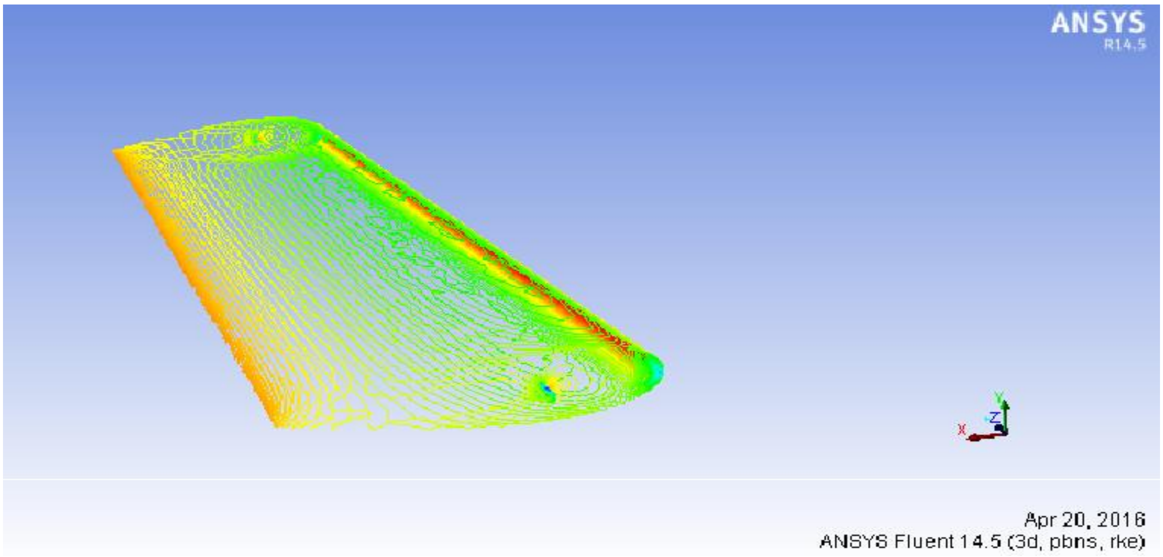

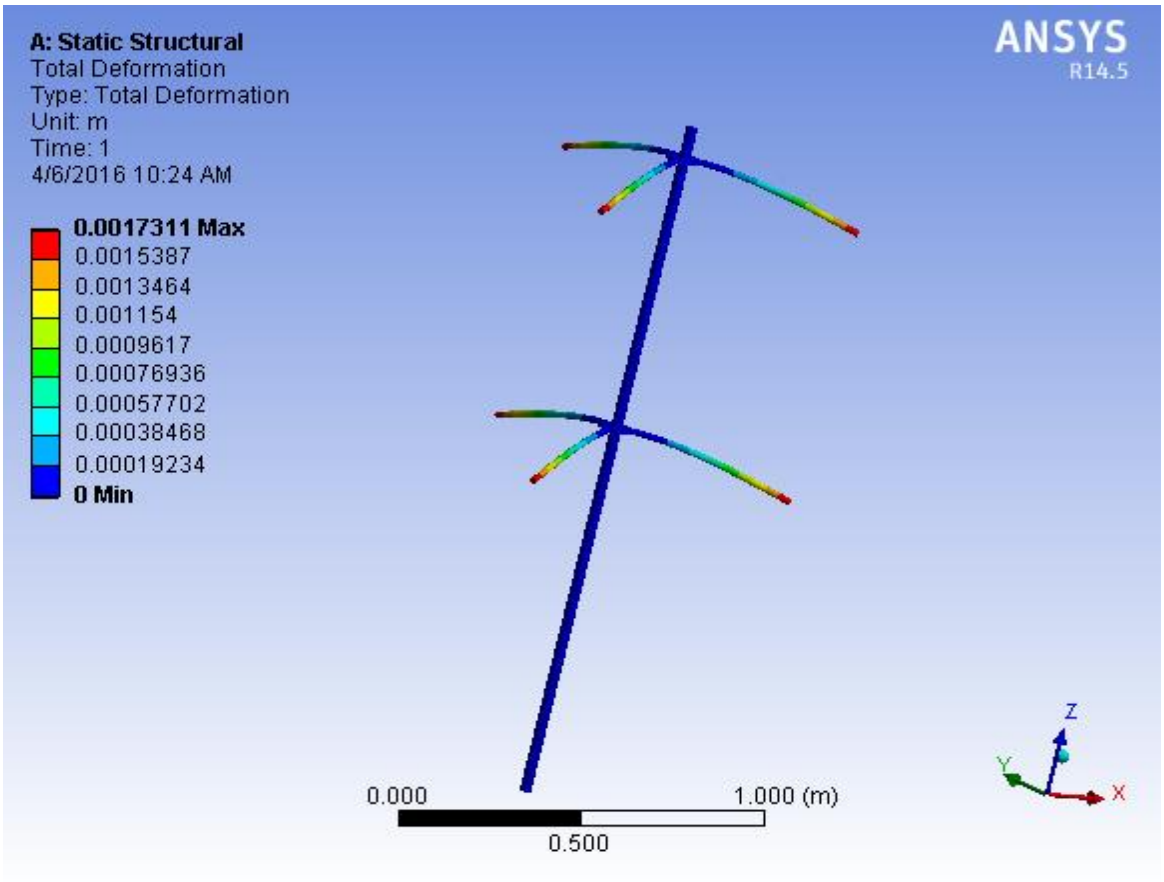

Chapter 4

Conclusions and Future Work

4.1 Conclusions

A Darrieus type VAWT is designed and it's prototype has been manufactured with an appropriate value of efficiency. Blades are made of Thermocol sheet wrapped with Glass paper. Main shaft is made of Structural Steel whereas the connecting rods are made from aluminum. The testing of prototype proves that turbine produces rpm and generates electricity close to the predicted value. Wind Energy serves to be the Clean Energy source. Recommended work can bring advances to this technology which will serve as a helping hand in the energy crisis scenario faced by Pakistan.

4.2 Future Work

Due to time and financial constraints, some of the features could not be integrated. Including following features in wind turbine would increase efficiency of the wind turbine:

Hybrid Design: Incorporation of Savonius and Darrieus rotors on the main shaft would give a better self-starting behavior.

Braking Mechanism: At higher wind Speeds braking mechanism is required to stop the rotor in order to prevent it from breaking.

References

Sandra Eriksson; Hans Bernhoff; Mats Leijon (June 2008), "Evaluation of different turbine concepts for wind power"

Buchner, A. J.; Lohry, M. W.; Martinelli, L.; Soria, J.; Smits, A. J. (2015). "Dynamic stall in vertical axis wind turbines: Comparing experiments and computations"

Chiras, D. (2010). Wind power basics: a green energy guide. Gabriola Island, BC, Canada: New Society Pub.

"Vertical Axis Wind Power Generation Prototype". Earthship Biotecture. Retrieved 18 September 2015.

Jha, Ph.D., A.R. (2010). Wind turbine technology. Boca Raton, FL: CRC Press

[1] http://www.energybeta.com

[2] http://www.energybeta.com/windpower/windmill/wind-power-from-the-darrieus-wind-turbine/

[3] http://www.windturbine-analysis.netfirms.com/

[4] http://www.awea.org

[5] http://www.awea.org/faq/vawt.html

[6] http://telosnet.com/wind/govprog.html

[7] http://en.wikipedia.org/

[8] http://www.reuk.co.uk/Giromill-Darrieus-Wind-Turbines.htm

[9] http://dspace1.isd.glam.ac.uk

[10] http://www.reuk.co.uk/OtherImages/cycloturbine-vawt.jpg